PG180-A02

256b GDDR6 x16
TALL DP + DP + DP + HDMI/DP + USB

TABLE OF CONTENTS

Page	Description
1	Table of Contents
2	Block Diagram
3	PCI Express
4	PCI Termination
5	MEMORY: GPU Partition A/B
6	MEMORY: FBA Partition 31..0
7	MEMORY: FBA Partition 63..32
8	MEMORY: FBB Partition 31..0
9	MEMORY: FBB Partition 63..32
10	MEMORY: GPU Partition C/D
11	MEMORY: FBC Partition 31..0
12	MEMORY: FBC Partition 63..32
13	MEMORY: FBD Partition 31..0
14	MEMORY: FBD Partition 63..32
15	GPU PWR and GND
16	GPU Decoupling
17	GPU DECOUPLING
18	IFPAB TALL-DP
19	IFPE DP
20	IFPF USBC
21	IFPC HDMI 2.0/DP
22	IFPD DP
23	NVHS INTERFACE
24	MISC: FAN,THERMAL,JTAG,GPIO,STEREO
25	MISC3: ROM, STRAPS
26	MISC: XTAL, PLL
27	MISC: USB PPC
28	PS: USB VR
29	PS: 5V, 5V BACKUP
30	PS: PEXVDD, 1V8
31	PS: FBVDD CONTROLLER
32	PS: FBVDD CONTROLLER OVR3
33	PS: FBVDD PHASE 1, 2
34	PS: NVVDD CONTROLLER OVR8
35	PS: NVVDD Phase 1, 2
36	PS: NVVDD Phase 3, 4
37	PS: NVVDD Phase 5, 6
38	PS: NVVDD Phase 7, 8
39	PS: INPUT SWITCH RTD3
40	PS: INPUT SWITCH RTD3 USB
41	PS: INPUT SWITCH RAIL BALANCE
42	PS: 12V CURRENT STEERING
43	PS: VR THERMAL PROTECTION
44	PS: INPUTS, FILTERING AND MONITORING
45	PS: CURRENT STEERING,HOT UNPLUG DETECT
46	PS: PRE-FILTER
47	SEQUENCE: 5V, 1V8, NV3V3 ENABLE
48	SEQUENCE: NV, PEX, FB ENABLE
49	SEQUENCE: PCIE VOLTAGE MONITOR
50	SEQUENCE: DISCHARGE
51	SEQUENCE: MISC
52	LED & FAN HEADERS
53	LED 2
54	Mechanical: Bracket/Thermal Solution

MSI CONFIDENTIAL
000179677 Jonepei(裴亮樂)
RD(C)20190805 RMA工程課
石阿鋒 (00068760)

ASSEMBLY	SKU SCHEMATIC, COMMON & NO_STUFF ASSEMBLY NOTES AND FINAL BOM
PAGE DETAIL	Table of Contents

ALL NVIDIA DESIGN SPECIFICATIONS, REFERENCE SPECIFICATIONS, REFERENCE BOARDS, FILES, DRAWINGS, DIAGNOSTICS, LISTS AND OTHER DOCUMENTS OR INFORMATION (TOGETHER AND SEPARATELY, 'MATERIALS') ARE BEING PROVIDED 'AS IS'. THE MATERIALS MAY CONTAIN KNOWN AND UNKNOWN VIOLATIONS OR DEVIATIONS OF INDUSTRY STANDARDS AND SPECIFICATIONS. NVIDIA MAKES NO WARRANTIES, EXPRESSED, IMPLIED, STATUTORY OR OTHERWISE WITH RESPECT TO THE MATERIALS OR OTHERWISE, AND EXPRESSLY DISCLAIMS ALL IMPLIED WARRANTIES INCLUDING, WITHOUT LIMITATION, THE WARRANTIES OF DESIGN, OF NONINFRINGEMENT, MERCHANTABILITY OR FITNESS FOR A PARTICULAR PURPOSE, OR ARISING FROM A COURSE OF DEALING, TRADE USAGE, TRADE PRACTICE, OR INDUSTRY STANDARDS.

NVIDIA CORPORATION
2701 SAN TOMAS EXPRESSWAY
SANTA CLARA, CA 95050, USA

NV_PN	600-1G180-0002-300		
PCB REV	PG180-A02	PAGE	1 OF 54
BOM REV	B	DATE	21-JUN-2018

Page2: Block Diagram

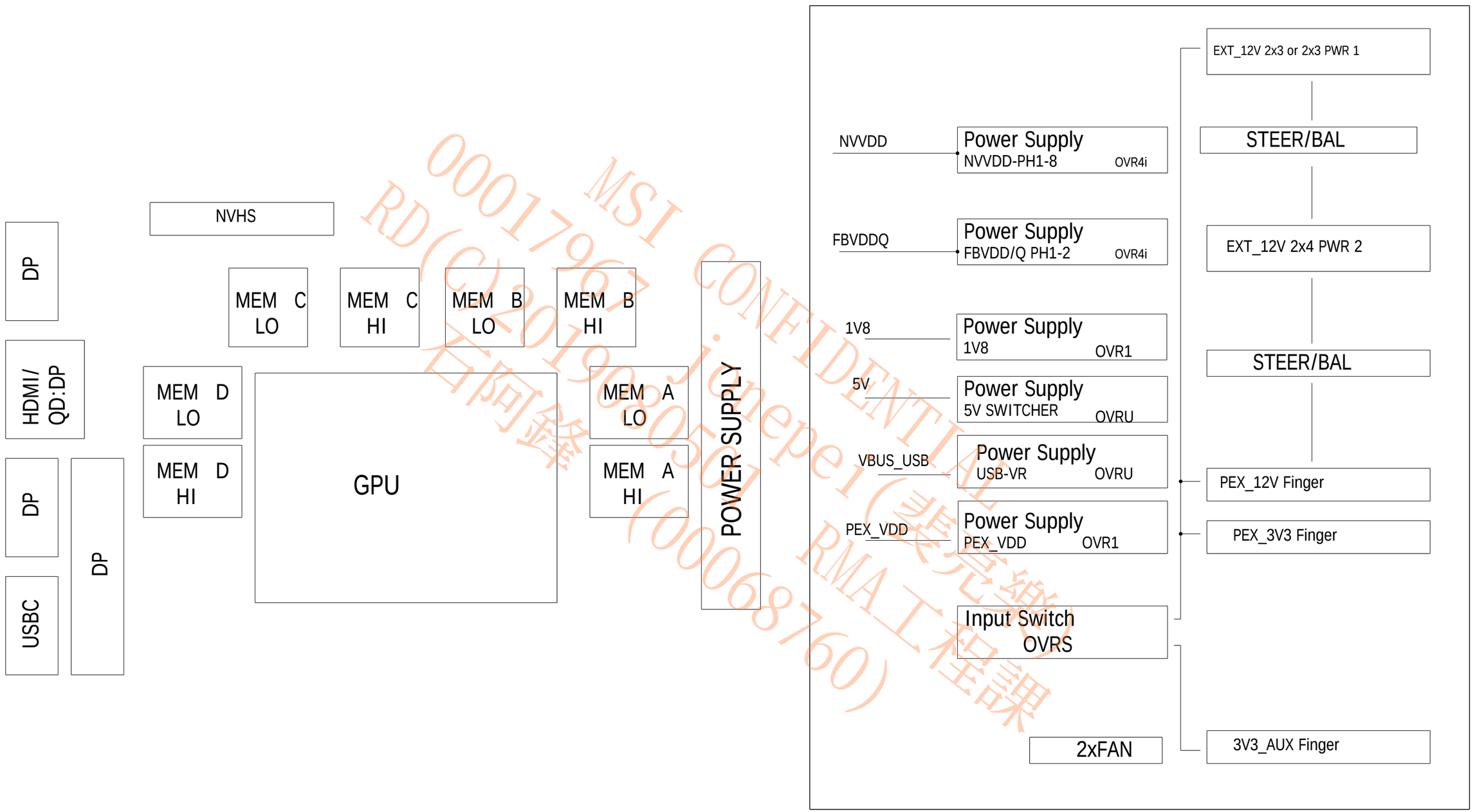

MSI CONFIDENTIAL
0001796 jinepe1(黃完璇)
RD(C)2019805
紅阿鋒(00068760)
RMA工程課

ASSEMBLY	SKU SCHEMATIC, COMMON & NO_STUFF ASSEMBLY NOTES AND FINAL BOM
PAGE DETAIL	Block Diagram

ALL NVIDIA DESIGN SPECIFICATIONS, REFERENCE SPECIFICATIONS, REFERENCE BOARDS, FILES, DRAWINGS, DIAGNOSTICS, LISTS AND OTHER DOCUMENTS OR INFORMATION (TOGETHER AND SEPARATELY, 'MATERIALS') ARE BEING PROVIDED 'AS IS'. THE MATERIALS MAY CONTAIN KNOWN AND UNKNOWN VIOLATIONS OR DEVIATIONS OF INDUSTRY STANDARDS AND SPECIFICATIONS. NVIDIA MAKES NO WARRANTIES, EXPRESSED, IMPLIED, STATUTORY OR OTHERWISE WITH RESPECT TO THE MATERIALS OR OTHERWISE, AND EXPRESSLY DISCLAIMS ALL IMPLIED WARRANTIES INCLUDING, WITHOUT LIMITATION, THE WARRANTIES OF DESIGN, OF NONINFRINGEMENT, MERCHANTABILITY OR FITNESS FOR A PARTICULAR PURPOSE, OR ARISING FROM A COURSE OF DEALING, TRADE USAGE, TRADE PRACTICE, OR INDUSTRY STANDARDS.

NVIDIA CORPORATION
2701 SAN TOMAS EXPRESSWAY
SANTA CLARA, CA 95050, USA

NV_PN	600-1G180-0002-300		
PCB REV	PG180-A02	PAGE	2 OF 54
BOM REV	B	DATE	21-JUN-2018

Page3: PCI Express

NET		VOLTAGE	MAX_CURRENT	MIN_WIDTH
12V	NV_SOURCE_POWER_NET	12V	5.5A	0.406
3V3	NV_SOURCE_POWER_NET	3.3V	3.0A	0.400
GND	NV_SOURCE_POWER_NET	0V	8.5A	0.300

CN1
CON_X16
NO STUFF
CON_PCIEXP_X16_EDGE

G1
BGA2228
COMMON
1/22 PCI_EXPRESS

Place under GPU

Place between GPU and PS

MSI CONFIDENTIAL 機密文件
0001706501 Jonepeter RD(C) 2018/08/06 (000687667) 不得翻印 (完樂工程課)

ASSEMBLY	SKU SCHEMATIC, COMMON & NO_STUFF ASSEMBLY NOTES AND FINAL BOM
PAGE DETAIL	PCI Express

ALL NVIDIA DESIGN SPECIFICATIONS, REFERENCE SPECIFICATIONS, REFERENCE BOARDS, FILES, DRAWINGS, DIAGNOSTICS, LISTS AND OTHER DOCUMENTS OR INFORMATION (TOGETHER AND SEPARATELY, 'MATERIALS') ARE BEING PROVIDED 'AS IS'. THE MATERIALS MAY CONTAIN KNOWN AND UNKNOWN VIOLATIONS OR DEVIATIONS OF INDUSTRY STANDARDS AND SPECIFICATIONS. NVIDIA MAKES NO WARRANTIES, EXPRESSED, IMPLIED, STATUTORY OR OTHERWISE WITH RESPECT TO THE MATERIALS OR OTHERWISE, AND EXPRESSLY DISCLAIMS ALL IMPLIED WARRANTIES INCLUDING, WITHOUT LIMITATION, THE WARRANTIES OF DESIGN, OF NONINFRINGEMENT, MERCHANTABILITY OR FITNESS FOR A PARTICULAR PURPOSE, OR ARISING FROM A COURSE OF DEALING, TRADE USAGE, TRADE PRACTICE, OR INDUSTRY STANDARDS.

NVIDIA CORPORATION
2701 SAN TOMAS EXPRESSWAY
SANTA CLARA, CA 95050, USA

NV_PN	600-1G180-0002-300		
PCB REV	PG180-A02	PAGE	3 OF 54
BOM REV	B	DATE	21-JUN-2018

Page4: PCI Termination

51.2F> 3.2A<> IN PEX_CLKREQ* C136 0402 | 1pF 50V 0.25pF C0G COMMON PEX_CLKREQ_RC* R111 0402 40.2ohm 1 % COMMON GND

3.1A> IN PEX_PRSNT2_A C1884 0402 | 1pF 50V 0.25pF C0G COMMON PEX_PRSNT2_A_RC R1214 0402 40.2ohm 1 % COMMON GND

3.2A> IN PEX_PWRBRK C1782 0402 | 1pF 50V 0.25pF C0G COMMON PEX_PWRBRK_RC R1189 0402 40.2ohm 1 % COMMON GND

3.2A> IN PEX_PRSNT2_B C1777 0402 | 1pF 50V 0.25pF C0G COMMON PEX_PRSNT2_B_RC R1187 0402 40.2ohm 1 % COMMON GND

3.3A> IN PEX_PRSNT2_C C180 0402 | 1pF 50V 0.25pF C0G COMMON PEX_PRSNT2_C_RC R136 0402 40.2ohm 1 % COMMON GND

PLACE CLOSE TO B81

3.1A> IN PEX_PRSNT* C197 0402 | 1pF 50V 0.25pF C0G COMMON PEX_PRSNT_RC* R144 0402 40.2ohm 1 % COMMON GND

3.4A> IN PEX_RSVD8 C196 0402 | 1pF 50V 0.25pF C0G COMMON PEX_RSVD8_RC R143 0402 40.2ohm 1 % COMMON GND

3.2A> IN PEX_RSVD3 C1868 0402 | 1pF 50V 0.25pF C0G COMMON PEX_RSVD3_RC R1209 0402 40.2ohm 1 % COMMON GND

3.2A> IN PEX_RSVD5 C1767 0402 | 1pF 50V 0.25pF C0G COMMON PEX_RSVD5_RC R1181 0402 40.2ohm 1 % COMMON GND

3.3A> IN PEX_RSVD6 C1755 0402 | 1pF 50V 0.25pF C0G COMMON PEX_RSVD6_RC R1169 0402 40.2ohm 1 % COMMON GND

3.4A> IN PEX_RSVD7 C181 0402 | 1pF 50V 0.25pF C0G COMMON PEX_RSVD7_RC R137 0402 40.2ohm 1 % COMMON GND

MSI CONFIDENTIAL
0001796 7 jonepei(裴完樂)
RD(C)20190805 01 RMA工程課
石阿鋒 (00068760)

ASSEMBLY	SKU SCHEMATIC, COMMON & NO_STUFF ASSEMBLY NOTES AND FINAL BOM
PAGE DETAIL	PCI Termination

ALL NVIDIA DESIGN SPECIFICATIONS, REFERENCE SPECIFICATIONS, REFERENCE BOARDS, FILES, DRAWINGS, DIAGNOSTICS, LISTS AND OTHER DOCUMENTS OR INFORMATION (TOGETHER AND SEPARATELY, 'MATERIALS') ARE BEING PROVIDED 'AS IS'. THE MATERIALS MAY CONTAIN KNOWN AND UNKNOWN VIOLATIONS OR DEVIATIONS OF INDUSTRY STANDARDS AND SPECIFICATIONS. NVIDIA MAKES NO WARRANTIES, EXPRESSED, IMPLIED, STATUTORY OR OTHERWISE WITH RESPECT TO THE MATERIALS OR OTHERWISE, AND EXPRESSLY DISCLAIMS ALL IMPLIED WARRANTIES INCLUDING, WITHOUT LIMITATION, THE WARRANTIES OF DESIGN, OF NONINFRINGEMENT, MERCHANTABILITY OR FITNESS FOR A PARTICULAR PURPOSE, OR ARISING FROM A COURSE OF DEALING, TRADE USAGE, TRADE PRACTICE, OR INDUSTRY STANDARDS.

NVIDIA CORPORATION
2701 SAN TOMAS EXPRESSWAY
SANTA CLARA, CA 95050, USA

NV_PN	600-1G180-0002-300		
PCB REV	PG180-A02	PAGE	4 OF 54
BOM REV	B	DATE	21-JUN-2018

Page5: MEMORY: GPU Partition A/B

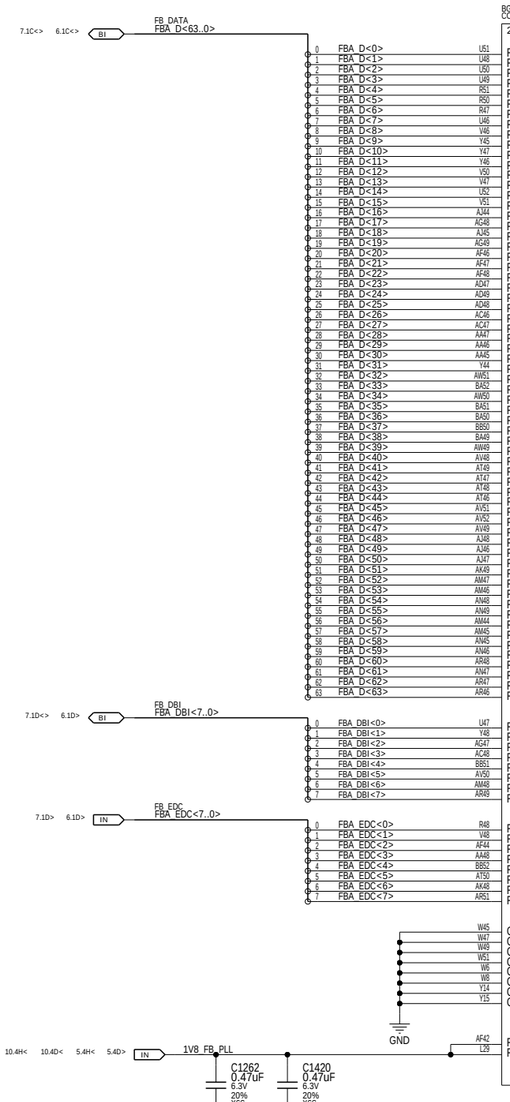

ASSEMBLY	SKU SCHEMATIC, COMMON & NO_STUFF ASSEMBLY NOTES AND FINAL BOM
PAGE DETAIL	MEMORY: GPU Partition A/B

ALL NVIDIA DESIGN SPECIFICATIONS, REFERENCE SPECIFICATIONS, REFERENCE BOARDS, FILES, DRAWINGS, DIAGNOSTICS, LISTS AND OTHER DOCUMENTS OR INFORMATION (TOGETHER AND SEPARATELY, 'MATERIALS') ARE BEING PROVIDED 'AS IS'. THE MATERIALS MAY CONTAIN KNOWN AND UNKNOWN VIOLATIONS OR DEVIATIONS OF INDUSTRY STANDARDS AND SPECIFICATIONS. NVIDIA MAKES NO WARRANTIES, EXPRESSED, IMPLIED, STATUTORY OR OTHERWISE WITH RESPECT TO THE MATERIALS OR OTHERWISE, AND EXPRESSLY DISCLAIMS ALL IMPLIED WARRANTIES INCLUDING, WITHOUT LIMITATION, THE WARRANTIES OF DESIGN, OF NONINFRINGEMENT, MERCHANTABILITY OR FITNESS FOR A PARTICULAR PURPOSE, OR ARISING FROM A COURSE OF DEALING, TRADE USAGE, TRADE PRACTICE, OR INDUSTRY STANDARDS.

NVIDIA CORPORATION
2701 SAN TOMAS EXPRESSWAY
SANTA CLARA, CA 95050, USA

NV_PN	600-1G180-0002-300		
PCB REV	PG180-A02	PAGE	5 OF 54
BOM REV	B	DATE	21-JUN-2018

MSI CONFIDENTIAL
P/N:2007967 jonepei
RMA(2019080501 (0006876O)
仅用于RMA维修

Page6: MEMORY: FBA Partition 31..0

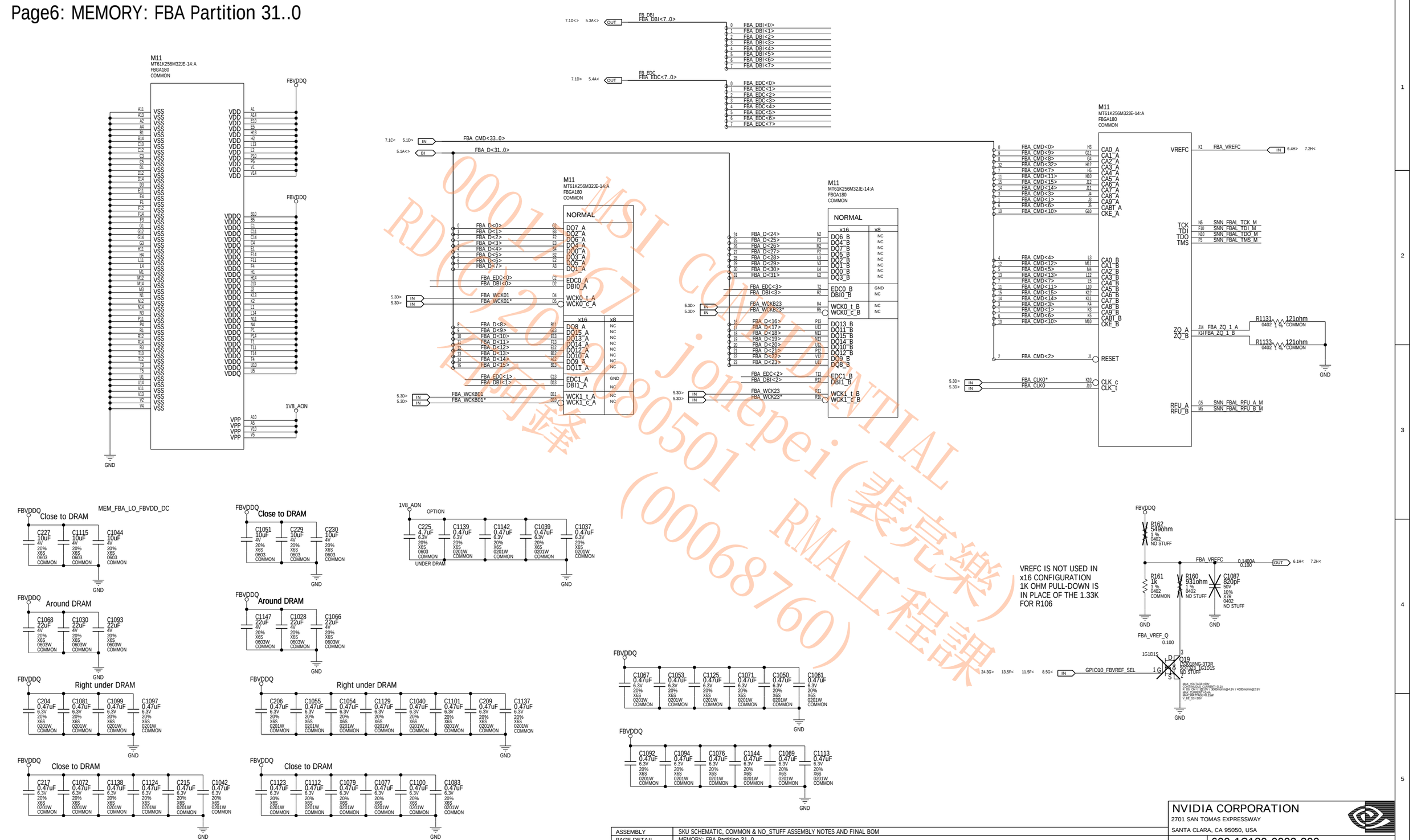

ASSEMBLY	SKU SCHEMATIC, COMMON & NO STUFF ASSEMBLY NOTES AND FINAL BOM
PAGE DETAIL	MEMORY: FBA Partition 31..0

ALL NVIDIA DESIGN SPECIFICATIONS, REFERENCE SPECIFICATIONS, REFERENCE BOARDS, FILES, DRAWINGS, DIAGNOSTICS, LISTS AND OTHER DOCUMENTS OR INFORMATION (TOGETHER AND SEPARATELY, 'MATERIALS') ARE BEING PROVIDED 'AS IS'. THE MATERIALS MAY CONTAIN KNOWN AND UNKNOWN VIOLATIONS OR DEVIATIONS OF INDUSTRY STANDARDS AND SPECIFICATIONS. NVIDIA MAKES NO WARRANTIES, EXPRESSED, IMPLIED, STATUTORY OR OTHERWISE WITH RESPECT TO THE MATERIALS OR OTHERWISE, AND EXPRESSLY DISCLAIMS ALL IMPLIED WARRANTIES INCLUDING, WITHOUT LIMITATION, THE WARRANTIES OF DESIGN, OF NONINFRINGEMENT, MERCHANTABILITY OR FITNESS FOR A PARTICULAR PURPOSE, OR ARISING FROM A COURSE OF DEALING, TRADE USAGE, TRADE PRACTICE, OR INDUSTRY STANDARDS.

NVIDIA CORPORATION
2701 SAN TOMAS EXPRESSWAY
SANTA CLARA, CA 95050, USA

NV_PN	600-1G180-0002-300		
PCB REV	PG180-A02	PAGE	6 OF 54
BOM REV	B	DATE	21-JUN-2018

Page7: MEMORY: FBA Partition 63..32

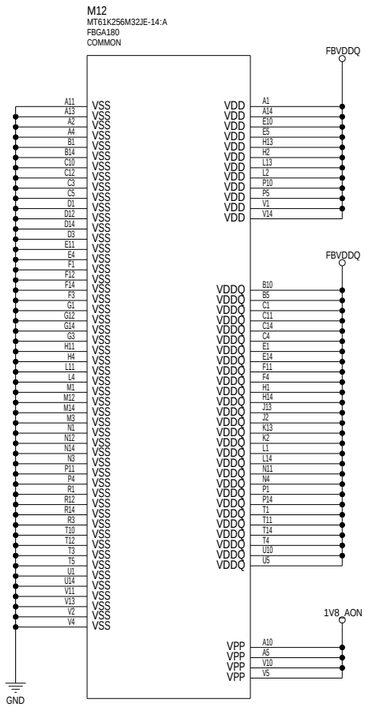

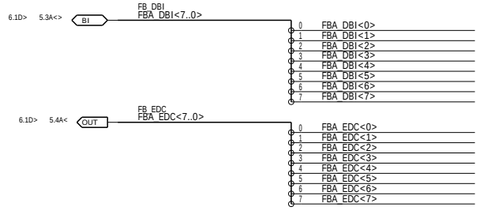

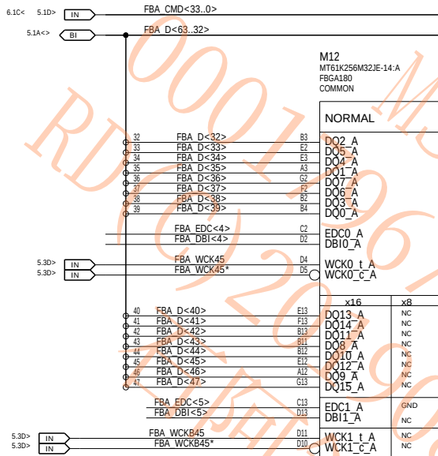

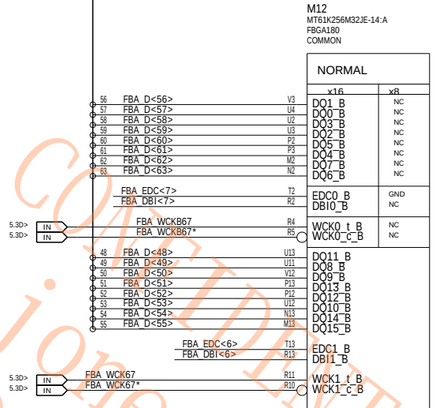

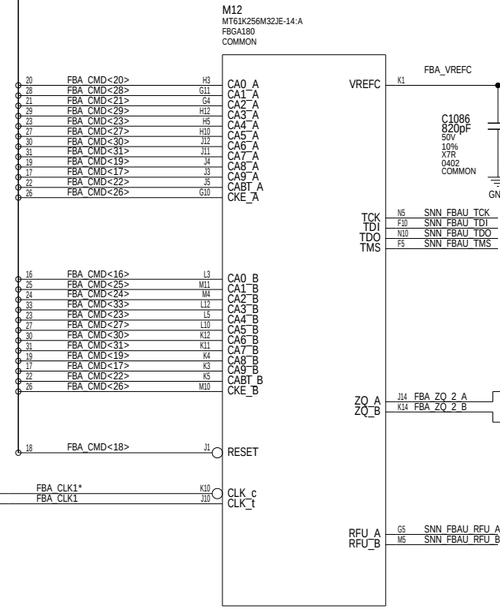

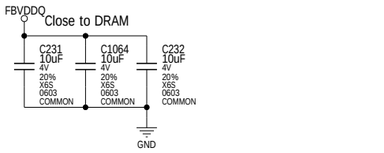

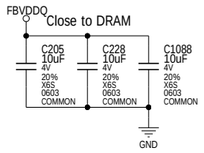

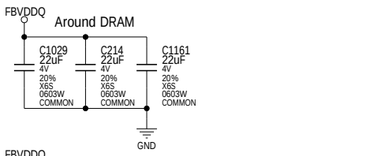

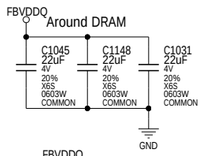

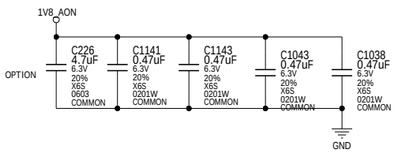

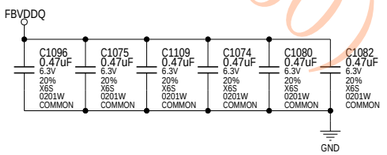

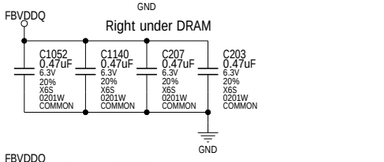

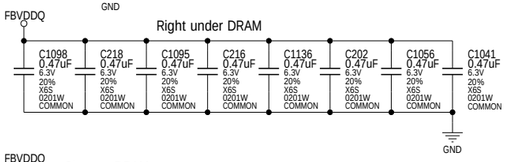

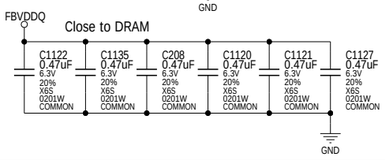

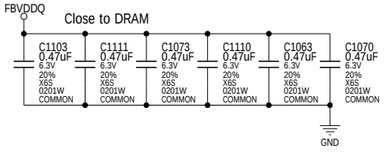

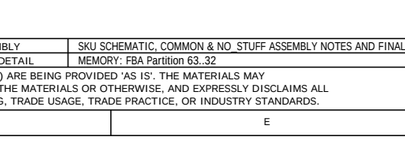

MSI CONFIDENTIAL
joyepei(裴完樂)
RMA工程課
(00068760)
00017967
RD2620180501

ASSEMBLY	SKU SCHEMATIC, COMMON & NO_STUFF ASSEMBLY NOTES AND FINAL BOM
PAGE DETAIL	MEMORY: FBA Partition 63..32

ALL NVIDIA DESIGN SPECIFICATIONS, REFERENCE SPECIFICATIONS, REFERENCE BOARDS, FILES, DRAWINGS, DIAGNOSTICS, LISTS AND OTHER DOCUMENTS OR INFORMATION (TOGETHER AND SEPARATELY, 'MATERIALS') ARE BEING PROVIDED 'AS IS'. THE MATERIALS MAY CONTAIN KNOWN AND UNKNOWN VIOLATIONS OR DEVIATIONS OF INDUSTRY STANDARDS AND SPECIFICATIONS. NVIDIA MAKES NO WARRANTIES, EXPRESSED, IMPLIED, STATUTORY OR OTHERWISE WITH RESPECT TO THE MATERIALS OR OTHERWISE, AND EXPRESSLY DISCLAIMS ALL IMPLIED WARRANTIES INCLUDING, WITHOUT LIMITATION, THE WARRANTIES OF DESIGN, OF NONINFRINGEMENT, MERCHANTABILITY OR FITNESS FOR A PARTICULAR PURPOSE, OR ARISING FROM A COURSE OF DEALING, TRADE USAGE, TRADE PRACTICE, OR INDUSTRY STANDARDS.

NVIDIA CORPORATION
2701 SAN TOMAS EXPRESSWAY
SANTA CLARA, CA 95050, USA

NV_PN	600-1G180-0002-300		
PCB REV	PG180-A02	PAGE	7 OF 54
BOM REV	B	DATE	21-JUN-2018

Page8: MEMORY: FBB Partition 31..0

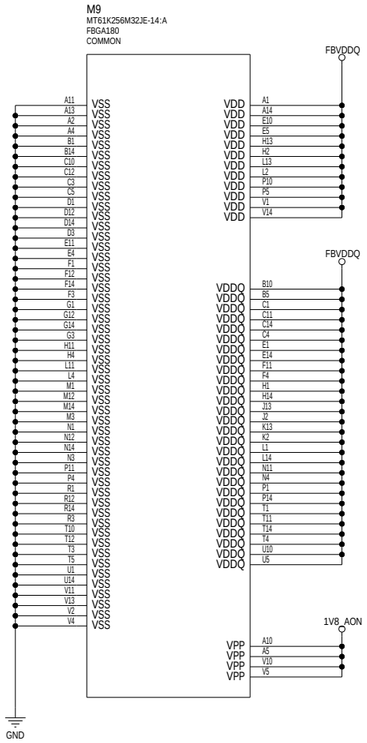

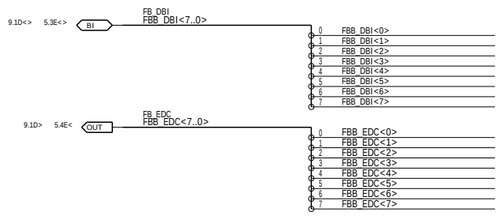

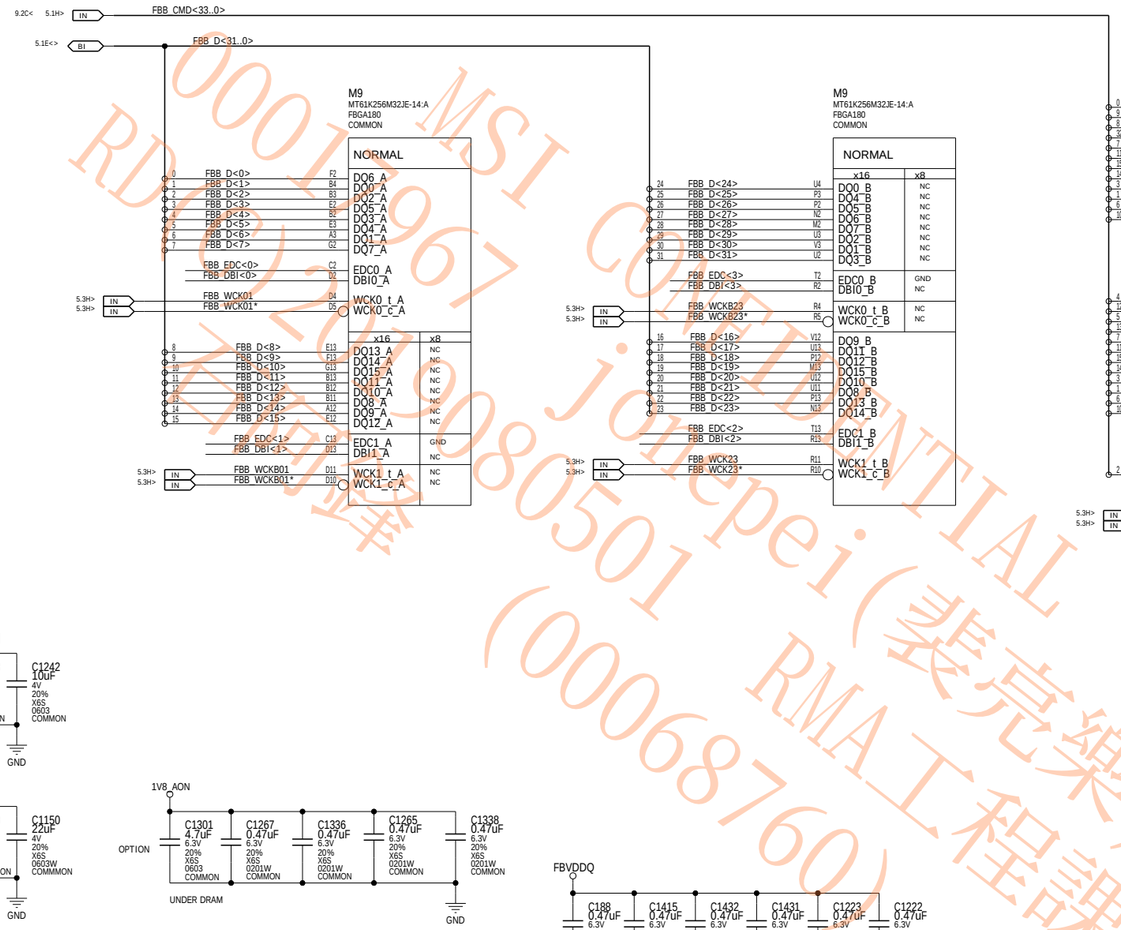

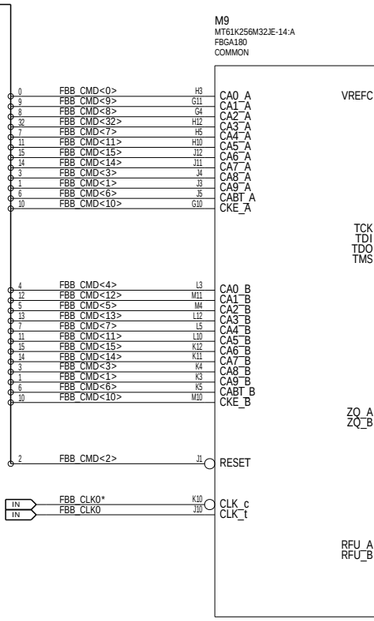

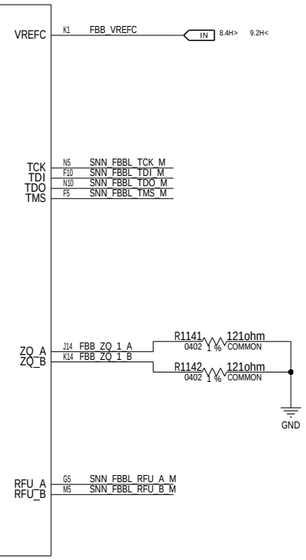

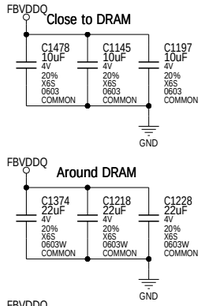

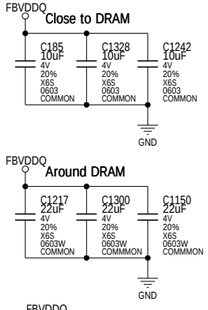

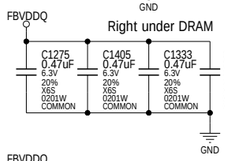

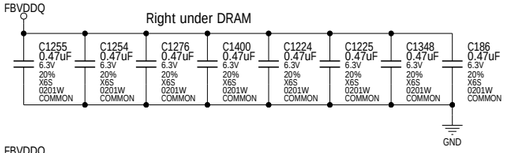

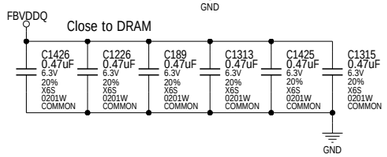

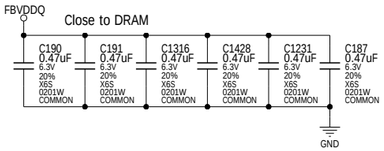

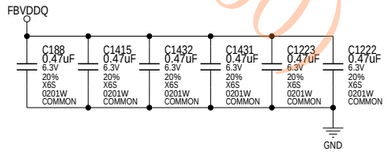

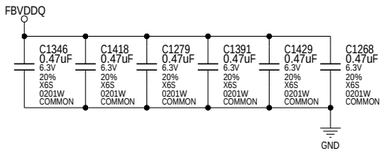

VREFC IS NOT USED IN
x16 CONFIGURATION
1K OHM PULL-DOWN IS
IN PLACE OF THE 1.33K
FOR R104

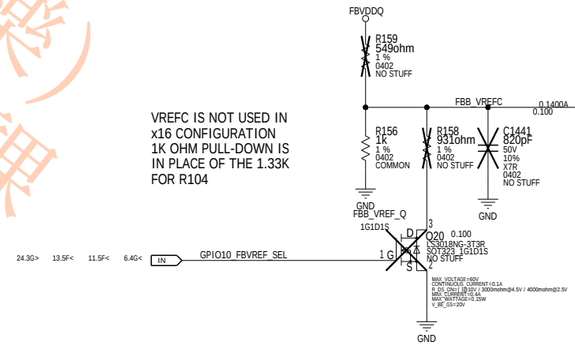

MSI CONFIDENTIAL
0001967 jonepei(裴完樂)
20190801
RD2 (00068760) RMA工程課

ASSEMBLY	SKU SCHEMATIC, COMMON & NO_STUFF ASSEMBLY NOTES AND FINAL BOM
PAGE DETAIL	MEMORY: FBB Partition 31..0

ALL NVIDIA DESIGN SPECIFICATIONS, REFERENCE SPECIFICATIONS, REFERENCE BOARDS, FILES, DRAWINGS, DIAGNOSTICS, LISTS AND OTHER DOCUMENTS OR INFORMATION (TOGETHER AND SEPARATELY, 'MATERIALS') ARE BEING PROVIDED 'AS IS'. THE MATERIALS MAY CONTAIN KNOWN AND UNKNOWN VIOLATIONS OR DEVIATIONS OF INDUSTRY STANDARDS AND SPECIFICATIONS. NVIDIA MAKES NO WARRANTIES, EXPRESSED, IMPLIED, STATUTORY OR OTHERWISE WITH RESPECT TO THE MATERIALS OR OTHERWISE, AND EXPRESSLY DISCLAIMS ALL IMPLIED WARRANTIES INCLUDING, WITHOUT LIMITATION, THE WARRANTIES OF DESIGN, OF NONINFRINGEMENT, MERCHANTABILITY OR FITNESS FOR A PARTICULAR PURPOSE, OR ARISING FROM A COURSE OF DEALING, TRADE USAGE, TRADE PRACTICE, OR INDUSTRY STANDARDS.

NVIDIA CORPORATION
2701 SAN TOMAS EXPRESSWAY
SANTA CLARA, CA 95050, USA

NV_PN	600-1G180-0002-300		
PCB REV	PG180-A02	PAGE	8 OF 54
BOM REV	B	DATE	21-JUN-2018

Page9: MEMORY: FBB Partition 63..32

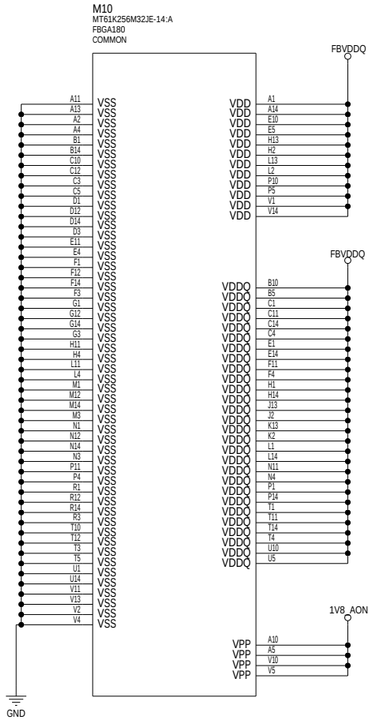

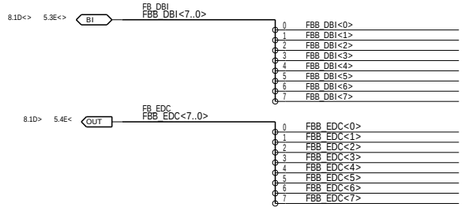

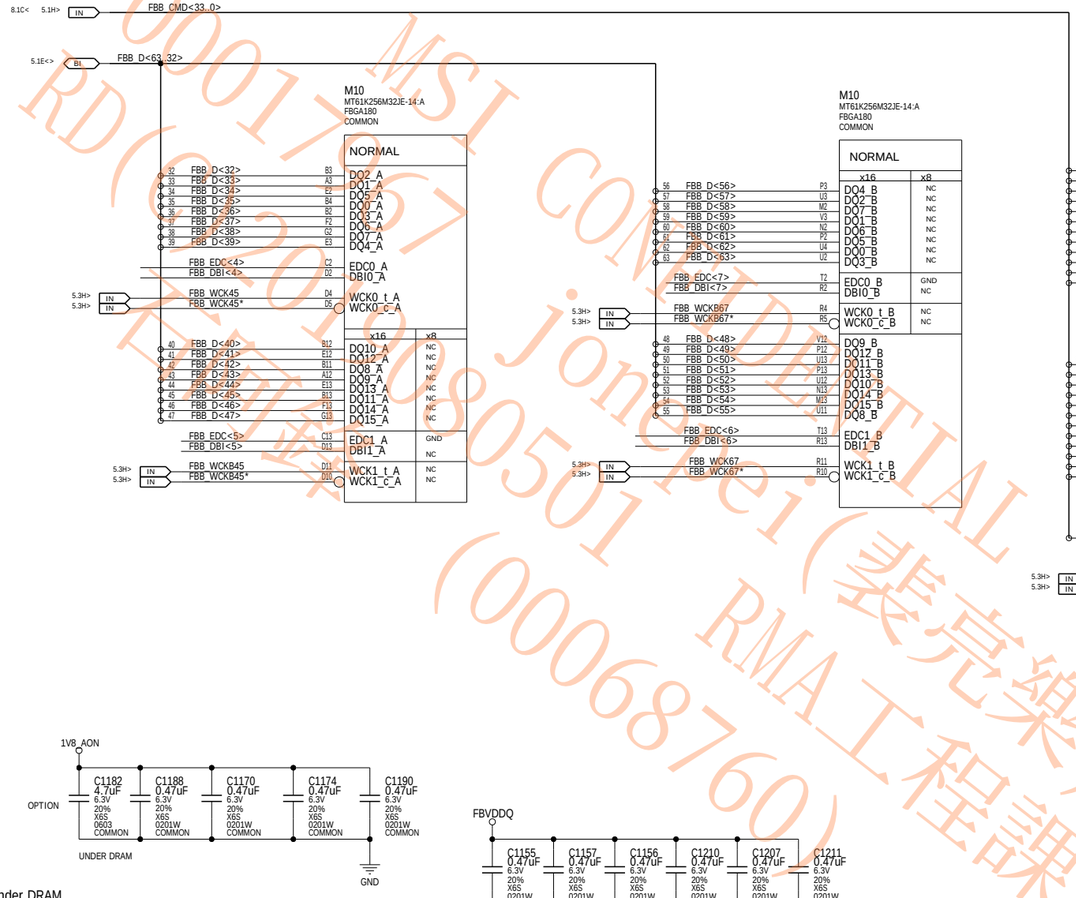

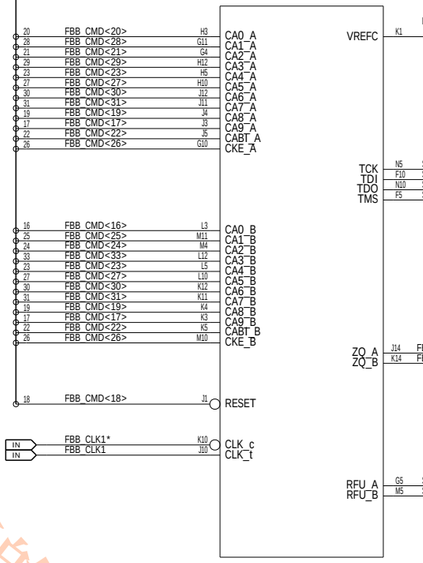

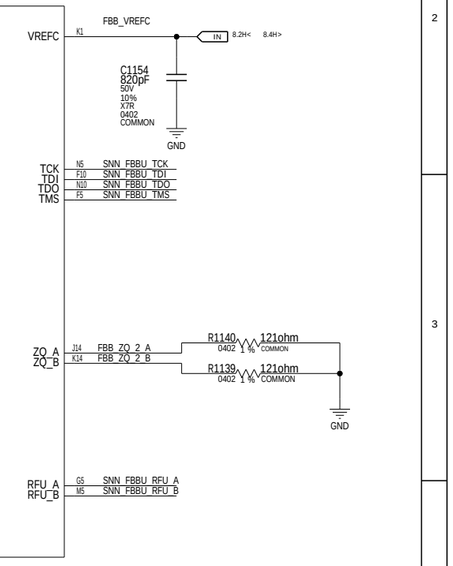

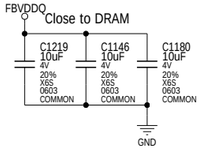

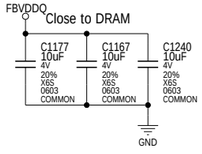

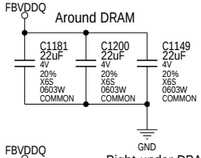

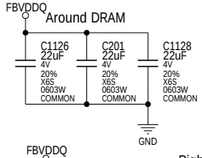

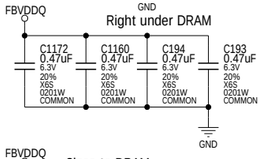

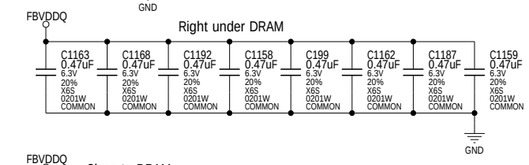

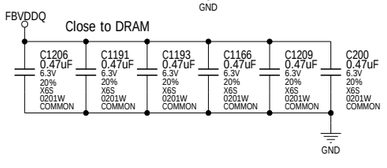

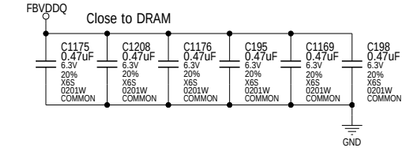

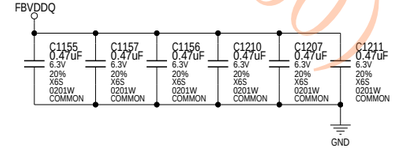

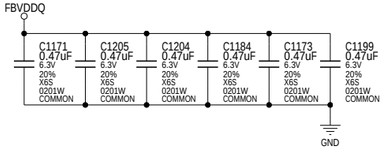

MSI CONFIDENTIAL
jonathan.lei@msi.com
RD(6)-20100805-001
RMA工程課
(00068760)

ASSEMBLY	SKU SCHEMATIC, COMMON & NO_STUFF ASSEMBLY NOTES AND FINAL BOM
PAGE DETAIL	MEMORY: FBB Partition 63..32

ALL NVIDIA DESIGN SPECIFICATIONS, REFERENCE SPECIFICATIONS, REFERENCE BOARDS, FILES, DRAWINGS, DIAGNOSTICS, LISTS AND OTHER DOCUMENTS OR INFORMATION (TOGETHER AND SEPARATELY, 'MATERIALS') ARE BEING PROVIDED 'AS IS'. THE MATERIALS MAY CONTAIN KNOWN AND UNKNOWN VIOLATIONS OR DEVIATIONS OF INDUSTRY STANDARDS AND SPECIFICATIONS. NVIDIA MAKES NO WARRANTIES, EXPRESSED, IMPLIED, STATUTORY OR OTHERWISE WITH RESPECT TO THE MATERIALS OR OTHERWISE, AND EXPRESSLY DISCLAIMS ALL IMPLIED WARRANTIES INCLUDING, WITHOUT LIMITATION, THE WARRANTIES OF DESIGN, OF NONINFRINGEMENT, MERCHANTABILITY OR FITNESS FOR A PARTICULAR PURPOSE, OR ARISING FROM A COURSE OF DEALING, TRADE USAGE, TRADE PRACTICE, OR INDUSTRY STANDARDS.

NVIDIA CORPORATION
2701 SAN TOMAS EXPRESSWAY
SANTA CLARA, CA 95050, USA

NV_PN	600-1G180-0002-300		
PCB REV	PG180-A02	PAGE	9 OF 54
BOM REV	B	DATE	21-JUN-2018

Page10: MEMORY: GPU Partition C/D

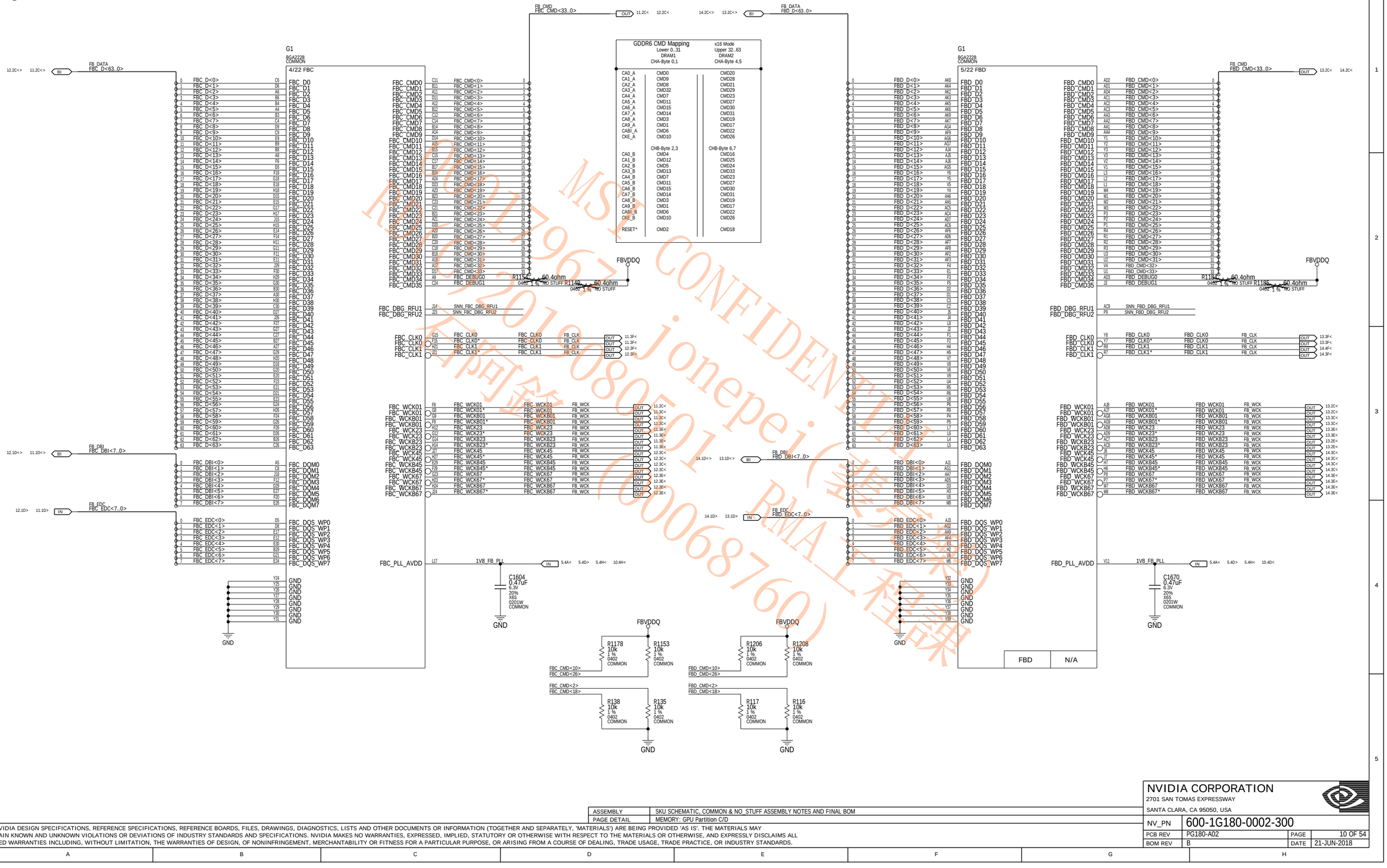

ASSEMBLY	SKU SCHEMATIC, COMMON & NO_STUFF ASSEMBLY NOTES AND FINAL BOM
PAGE DETAIL	MEMORY: GPU Partition C/D

ALL NVIDIA DESIGN SPECIFICATIONS, REFERENCE SPECIFICATIONS, REFERENCE BOARDS, FILES, DRAWINGS, DIAGNOSTICS, LISTS AND OTHER DOCUMENTS OR INFORMATION (TOGETHER AND SEPARATELY, 'MATERIALS') ARE BEING PROVIDED 'AS IS'. THE MATERIALS MAY CONTAIN KNOWN AND UNKNOWN VIOLATIONS OR DEVIATIONS OF INDUSTRY STANDARDS AND SPECIFICATIONS. NVIDIA MAKES NO WARRANTIES, EXPRESSED, IMPLIED, STATUTORY OR OTHERWISE WITH RESPECT TO THE MATERIALS OR OTHERWISE, AND EXPRESSLY DISCLAIMS ALL IMPLIED WARRANTIES INCLUDING, WITHOUT LIMITATION, THE WARRANTIES OF DESIGN, OF NONINFRINGEMENT, MERCHANTABILITY OR FITNESS FOR A PARTICULAR PURPOSE, OR ARISING FROM A COURSE OF DEALING, TRADE USAGE, TRADE PRACTICE, OR INDUSTRY STANDARDS.

NVIDIA CORPORATION
2701 SAN TOMAS EXPRESSWAY
SANTA CLARA, CA 95050, USA

NV_PN	600-1G180-0002-300		
PCB REV	PG180-A02	PAGE	10 OF 54
BOM REV	B	DATE	21-JUN-2018

MSI CONFIDENTIAL
RMA_L 程保
Ronnie_Jonepei(程保培)20190801
2019080501 2000068760

Page11: MEMORY: FBC Partition 31..0

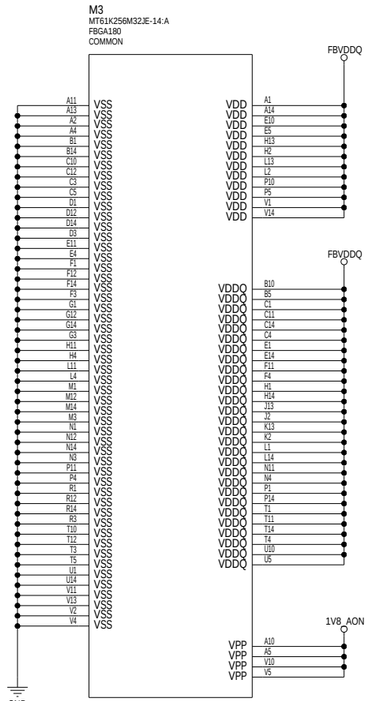

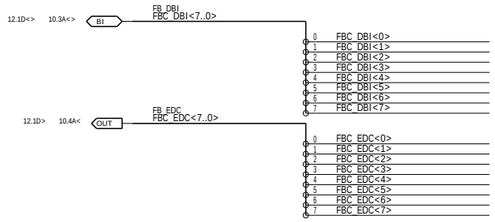

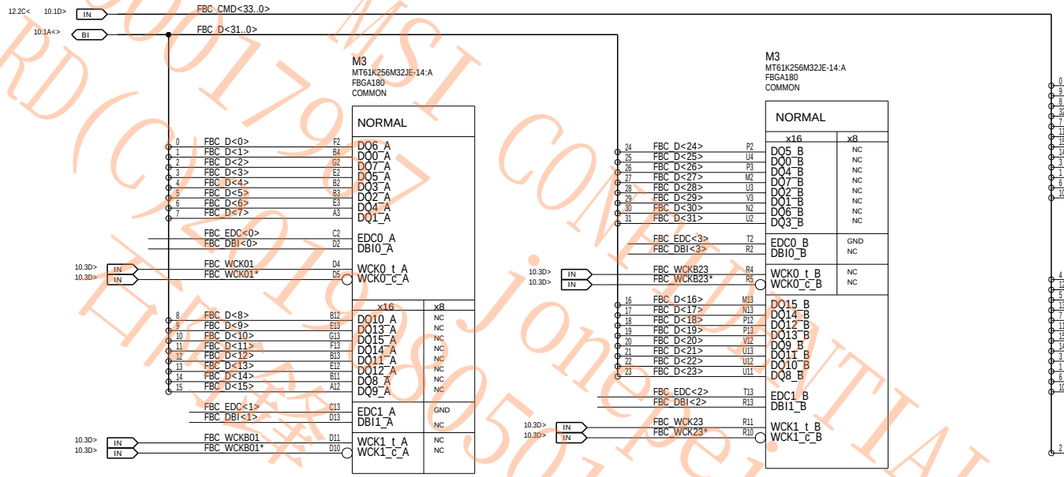

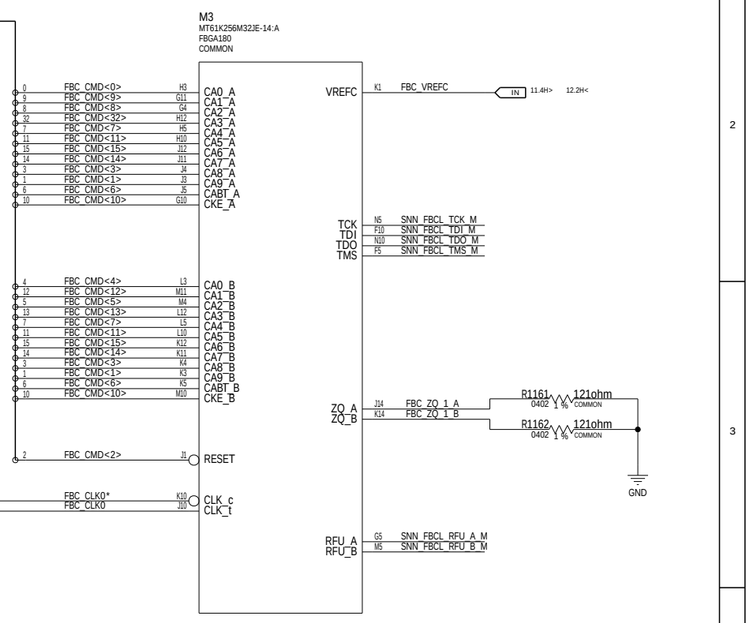

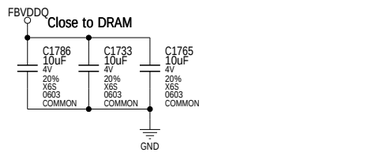

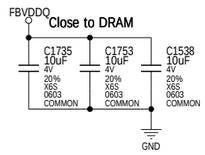

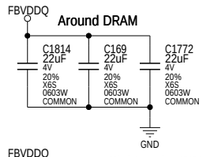

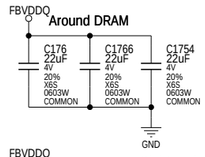

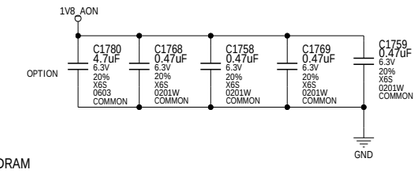

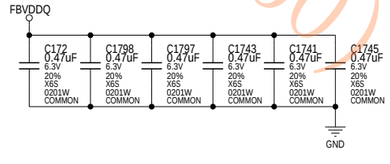

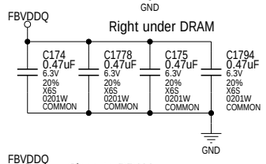

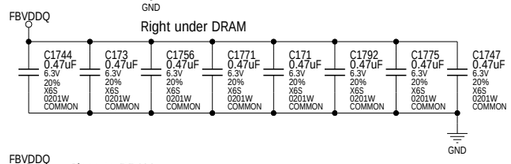

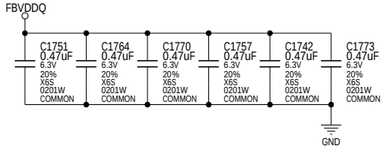

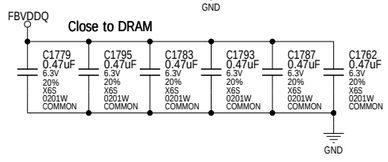

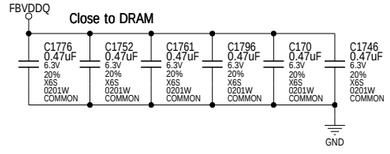

VREF IS NOT USED IN x16 CONFIGURATION 1K OHM PULL-DOWN IS IN PLACE OF THE 1.33K FOR R75

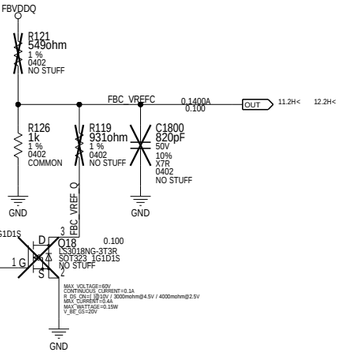

ALL NVIDIA DESIGN SPECIFICATIONS, REFERENCE SPECIFICATIONS, REFERENCE BOARDS, FILES, DRAWINGS, DIAGNOSTICS, LISTS AND OTHER DOCUMENTS OR INFORMATION (TOGETHER AND SEPARATELY, 'MATERIALS') ARE BEING PROVIDED 'AS IS'. THE MATERIALS MAY CONTAIN KNOWN AND UNKNOWN VIOLATIONS OR DEVIATIONS OF INDUSTRY STANDARDS AND SPECIFICATIONS. NVIDIA MAKES NO WARRANTIES, EXPRESSED, IMPLIED, STATUTORY OR OTHERWISE WITH RESPECT TO THE MATERIALS OR OTHERWISE, AND EXPRESSLY DISCLAIMS ALL IMPLIED WARRANTIES INCLUDING, WITHOUT LIMITATION, THE WARRANTIES OF DESIGN, OF NONINFRINGEMENT, MERCHANTABILITY OR FITNESS FOR A PARTICULAR PURPOSE, OR ARISING FROM A COURSE OF DEALING, TRADE USAGE, TRADE PRACTICE, OR INDUSTRY STANDARDS.

ASSEMBLY	SKU SCHEMATIC, COMMON & NO_STUFF ASSEMBLY NOTES AND FINAL BOM
PAGE DETAIL	MEMORY: FBC Partition 31..0

NVIDIA CORPORATION
2701 SAN TOMAS EXPRESSWAY
SANTA CLARA, CA 95050, USA

NV_PN	600-1G180-0002-300		
PCB REV	PG180-A02	PAGE	11 OF 54
BOM REV	B	DATE	21-JUN-2018

MSI CONFIDENTIAL
0001799 Jonpei(裝完樂)
RD(CY)-2016-0950 RMA工程課
(0006876O)

Page12: MEMORY: FBC Partition 63..32

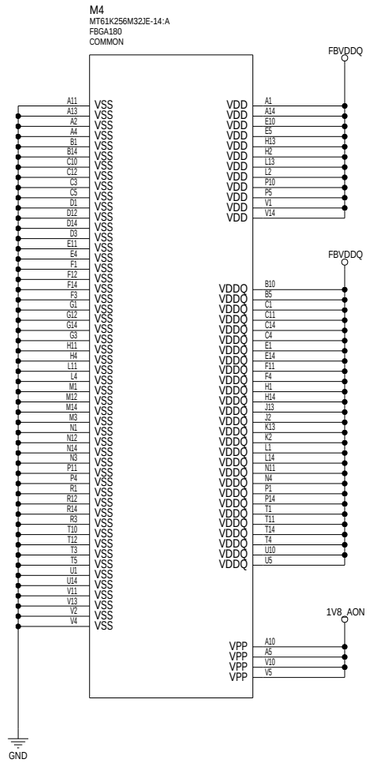

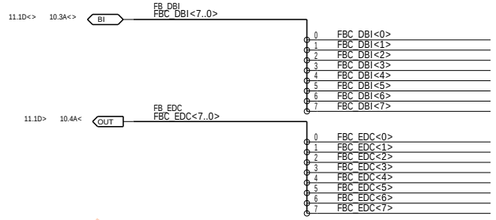

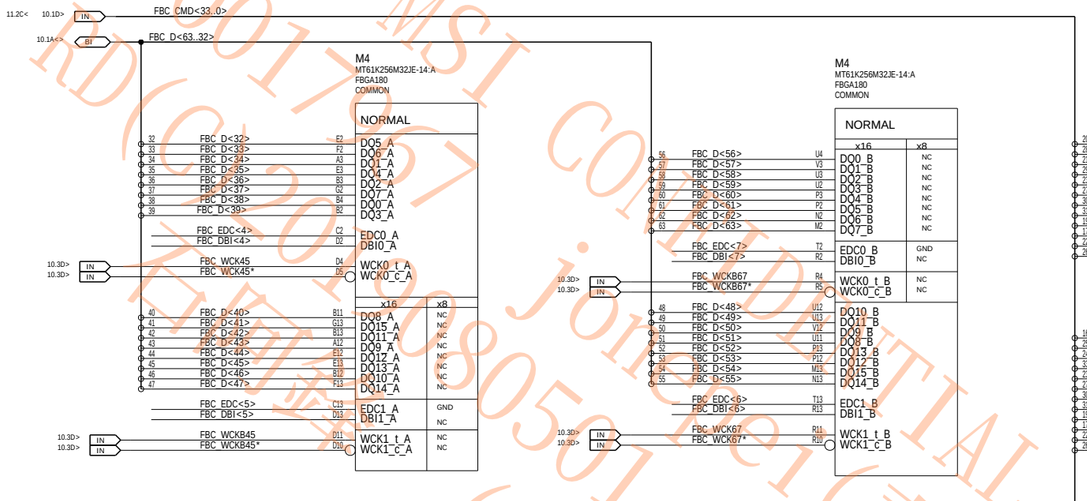

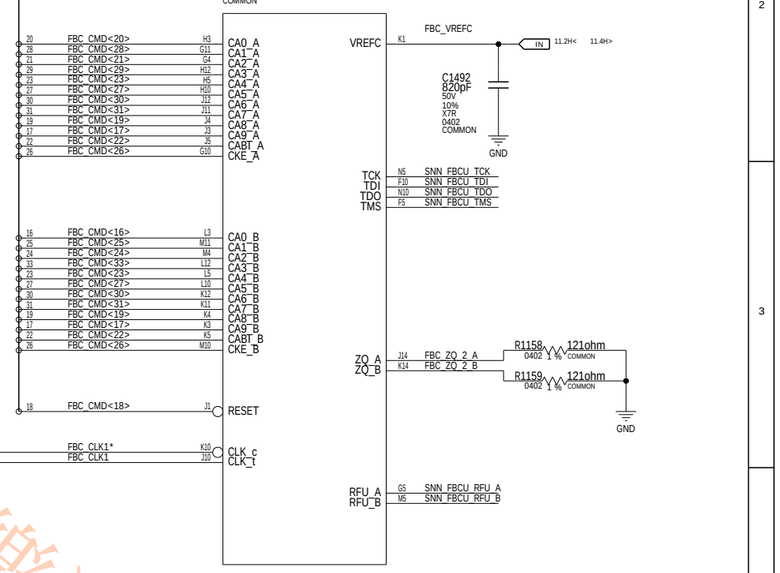

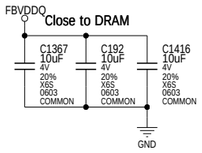

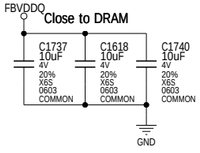

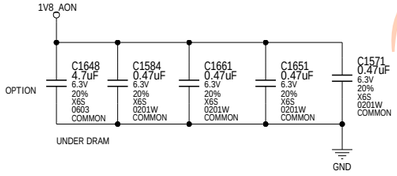

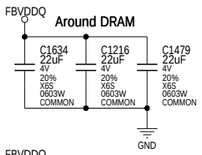

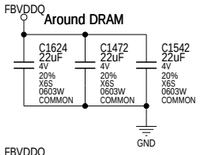

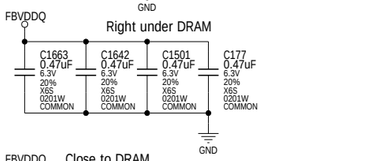

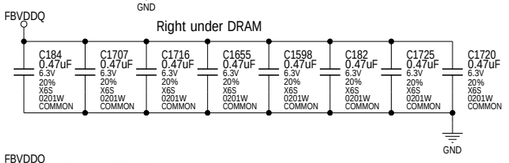

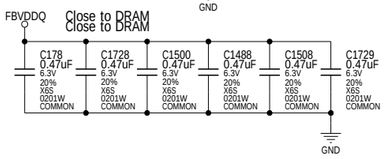

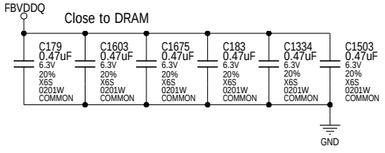

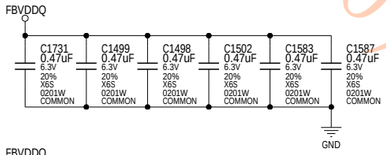

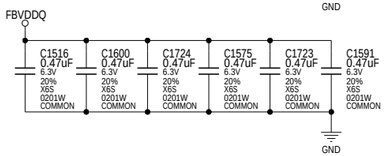

MSI CONFIDENTIAL
joie(裴亮樂)
RD(C12)(00068760)
RMA工程課
0001767

ASSEMBLY	SKU SCHEMATIC, COMMON & NO_STUFF ASSEMBLY NOTES AND FINAL BOM
PAGE DETAIL	MEMORY: FBC Partition 63..32

ALL NVIDIA DESIGN SPECIFICATIONS, REFERENCE SPECIFICATIONS, REFERENCE BOARDS, FILES, DRAWINGS, DIAGNOSTICS, LISTS AND OTHER DOCUMENTS OR INFORMATION (TOGETHER AND SEPARATELY, 'MATERIALS') ARE BEING PROVIDED 'AS IS'. THE MATERIALS MAY CONTAIN KNOWN AND UNKNOWN VIOLATIONS OR DEVIATIONS OF INDUSTRY STANDARDS AND SPECIFICATIONS. NVIDIA MAKES NO WARRANTIES, EXPRESSED, IMPLIED, STATUTORY OR OTHERWISE WITH RESPECT TO THE MATERIALS OR OTHERWISE, AND EXPRESSLY DISCLAIMS ALL IMPLIED WARRANTIES INCLUDING, WITHOUT LIMITATION, THE WARRANTIES OF DESIGN, OF NONINFRINGEMENT, MERCHANTABILITY OR FITNESS FOR A PARTICULAR PURPOSE, OR ARISING FROM A COURSE OF DEALING, TRADE USAGE, TRADE PRACTICE, OR INDUSTRY STANDARDS.

NVIDIA CORPORATION
2701 SAN TOMAS EXPRESSWAY
SANTA CLARA, CA 95050, USA

NV_PN	600-1G180-0002-300		
PCB REV	PG180-A02	PAGE	12 OF 54
BOM REV	B	DATE	21-JUN-2018

Page13: MEMORY: FBD Partition 31..0

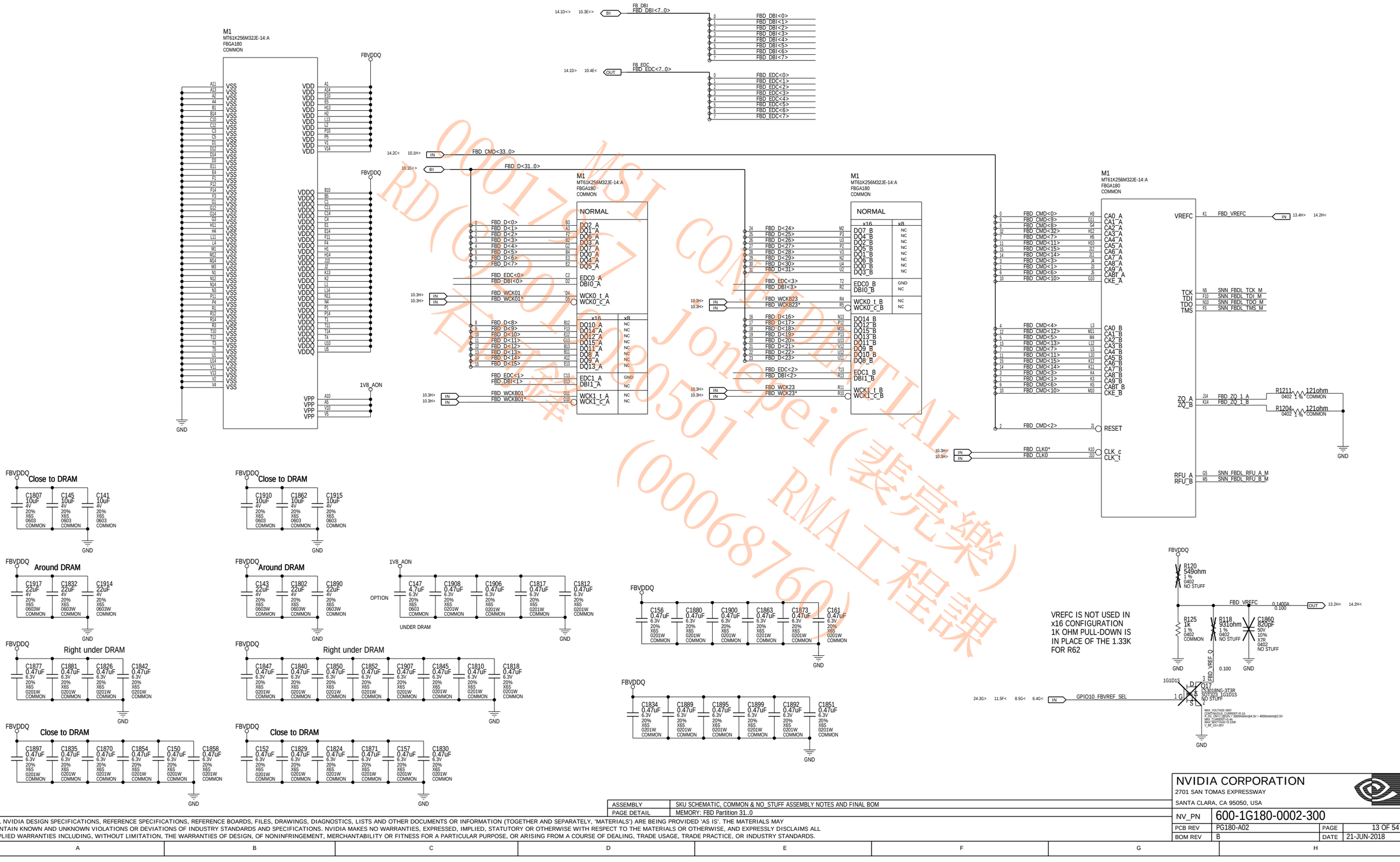

ALL NVIDIA DESIGN SPECIFICATIONS, REFERENCE SPECIFICATIONS, REFERENCE BOARDS, FILES, DRAWINGS, DIAGNOSTICS, LISTS AND OTHER DOCUMENTS OR INFORMATION (TOGETHER AND SEPARATELY, 'MATERIALS') ARE BEING PROVIDED 'AS IS'. THE MATERIALS MAY CONTAIN KNOWN AND UNKNOWN VIOLATIONS OR DEVIATIONS OF INDUSTRY STANDARDS AND SPECIFICATIONS. NVIDIA MAKES NO WARRANTIES, EXPRESSED, IMPLIED, STATUTORY OR OTHERWISE WITH RESPECT TO THE MATERIALS OR OTHERWISE, AND EXPRESSLY DISCLAIMS ALL IMPLIED WARRANTIES INCLUDING, WITHOUT LIMITATION, THE WARRANTIES OF DESIGN, OF NONINFRINGEMENT, MERCHANTABILITY OR FITNESS FOR A PARTICULAR PURPOSE, OR ARISING FROM A COURSE OF DEALING, TRADE USAGE, TRADE PRACTICE, OR INDUSTRY STANDARDS.

Page14: MEMORY: FBD Partition 63..32

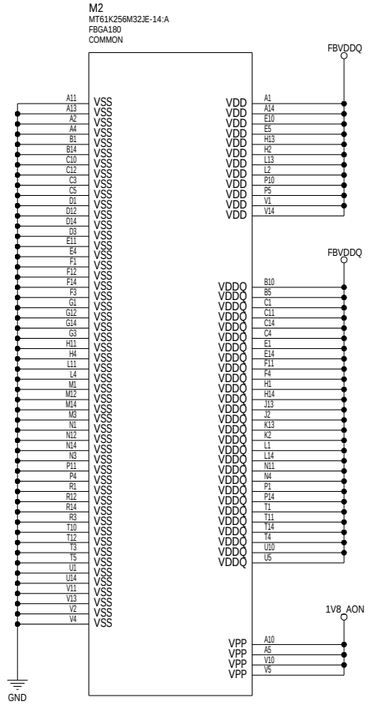

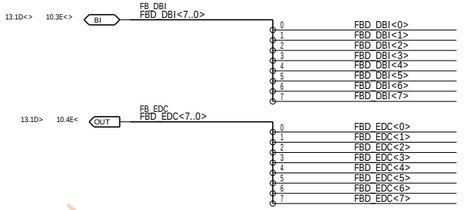

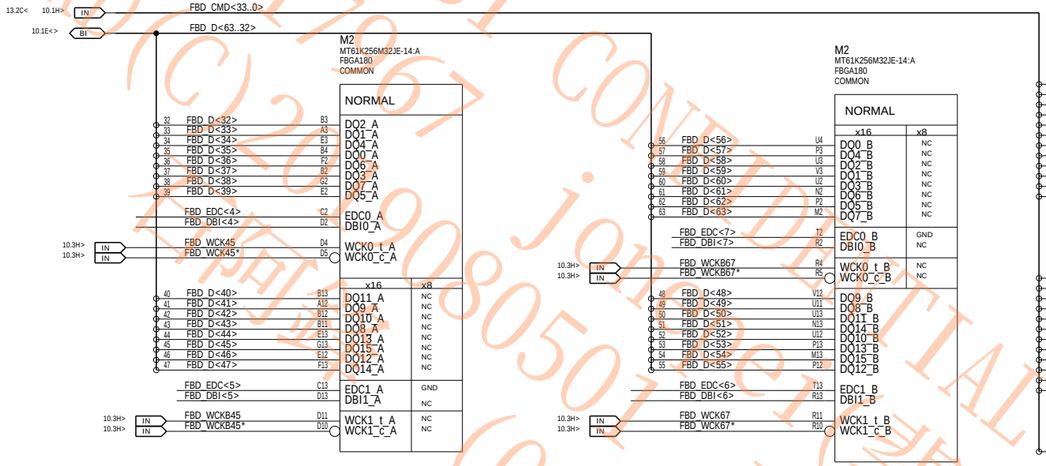

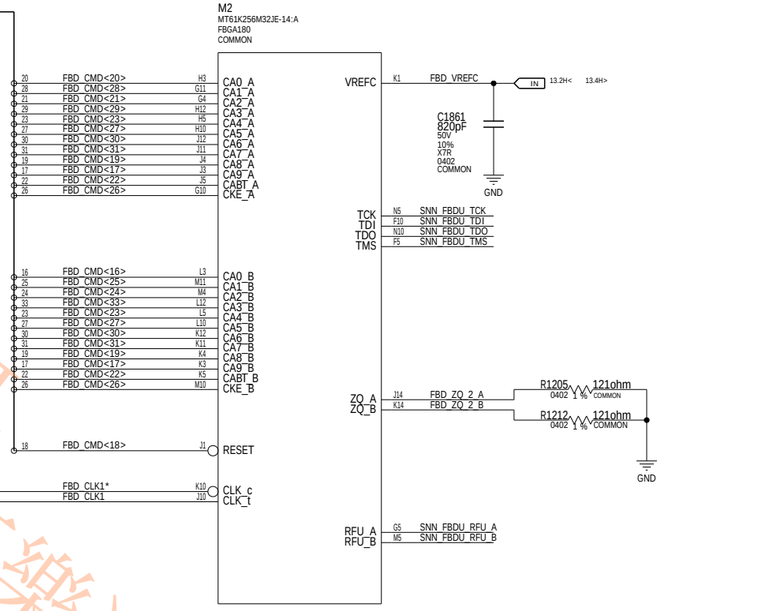

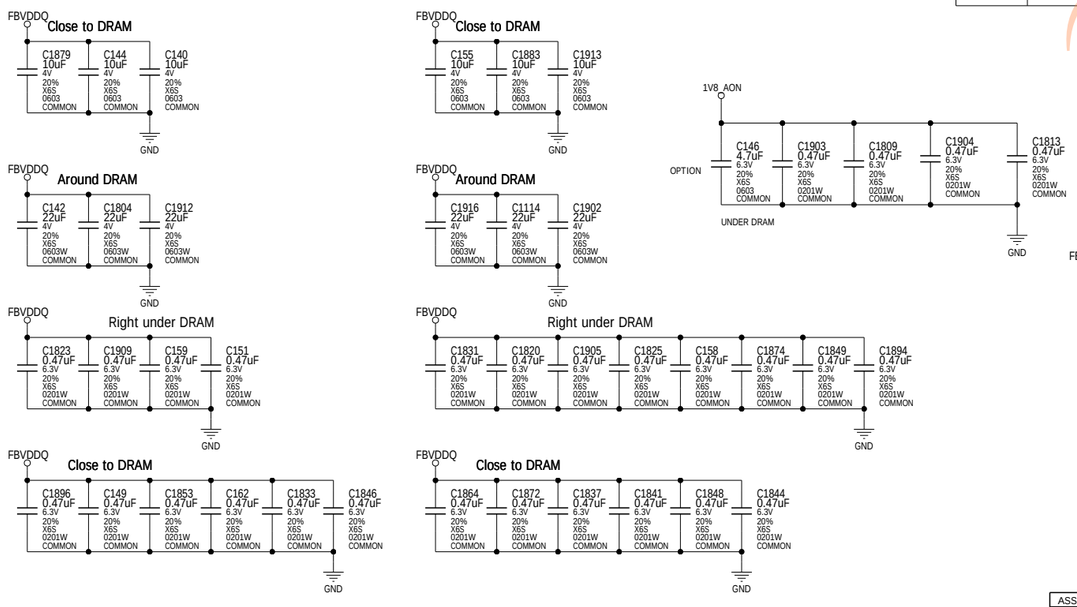

MSI CONFIDENTIAL
0001796 jonathan
RD(C) 2008050
(000068760)
RMA工程課

ASSEMBLY	SKU SCHEMATIC, COMMON & NO_STUFF ASSEMBLY NOTES AND FINAL BOM
PAGE DETAIL	MEMORY: FBD Partition 63..32

ALL NVIDIA DESIGN SPECIFICATIONS, REFERENCE SPECIFICATIONS, REFERENCE BOARDS, FILES, DRAWINGS, DIAGNOSTICS, LISTS AND OTHER DOCUMENTS OR INFORMATION (TOGETHER AND SEPARATELY, 'MATERIALS') ARE BEING PROVIDED 'AS IS'. THE MATERIALS MAY CONTAIN KNOWN AND UNKNOWN VIOLATIONS OR DEVIATIONS OF INDUSTRY STANDARDS AND SPECIFICATIONS. NVIDIA MAKES NO WARRANTIES, EXPRESSED, IMPLIED, STATUTORY OR OTHERWISE WITH RESPECT TO THE MATERIALS OR OTHERWISE, AND EXPRESSLY DISCLAIMS ALL IMPLIED WARRANTIES INCLUDING, WITHOUT LIMITATION, THE WARRANTIES OF DESIGN, OF NONINFRINGEMENT, MERCHANTABILITY OR FITNESS FOR A PARTICULAR PURPOSE, OR ARISING FROM A COURSE OF DEALING, TRADE USAGE, TRADE PRACTICE, OR INDUSTRY STANDARDS.

NVIDIA CORPORATION
2701 SAN TOMAS EXPRESSWAY
SANTA CLARA, CA 95050, USA

NV_PN	600-1G180-0002-300		
PCB REV	PG180-A02	PAGE	14 OF 54
BOM REV	B	DATE	21-JUN-2018

Page15: GPU PWR and GND

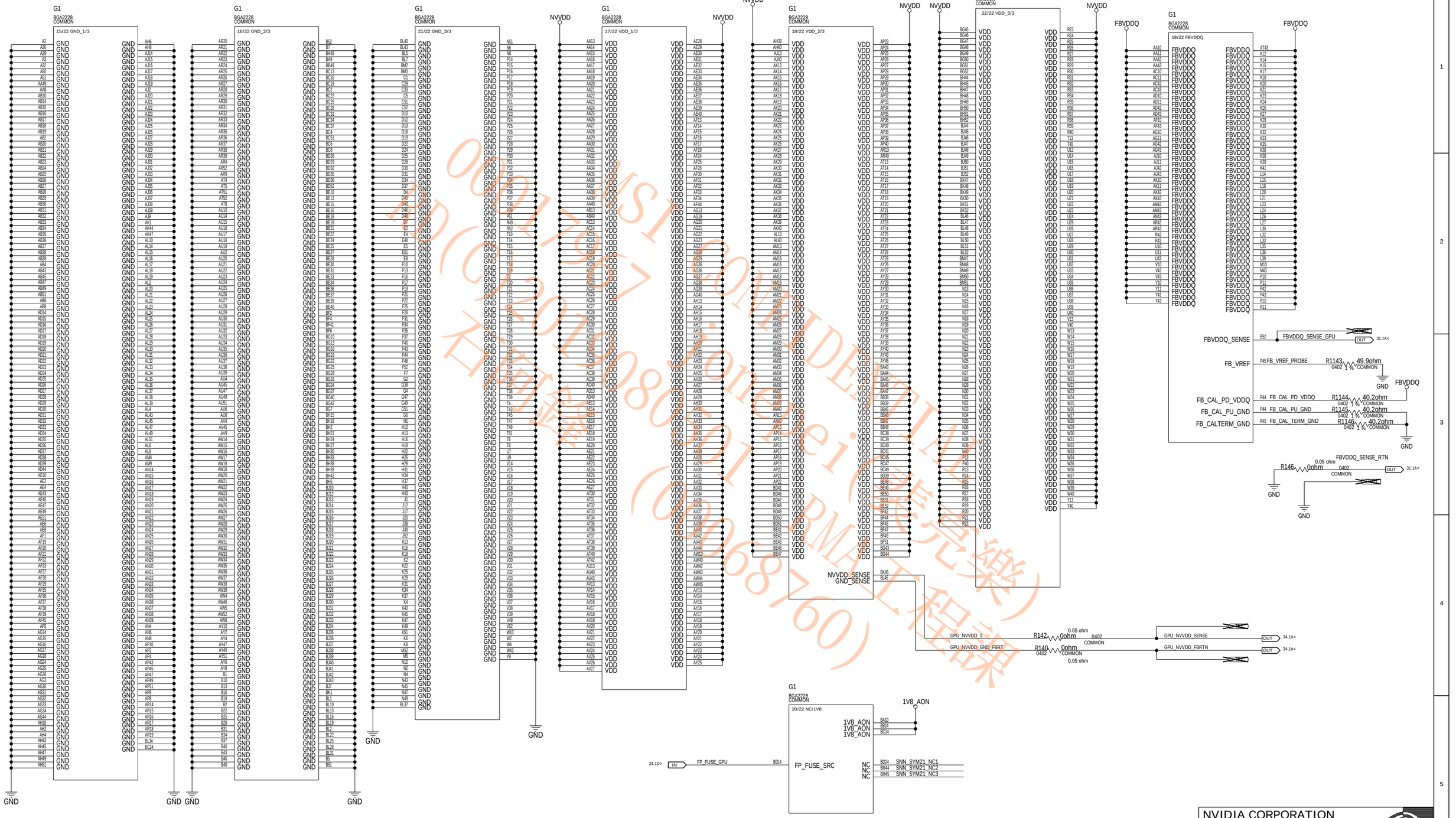

0821767 (MSI 微星科技股份有限公司)
2017/08/08 (2017/08/08)
KT (KT 張樂樂)
MSI-MS-17B1 (MS-17B1)

ASSEMBLY	SKU SCHEMATIC, COMMON & NO_STUFF ASSEMBLY NOTES AND FINAL BOM
PAGE DETAIL	GPU PWR and GND

ALL NVIDIA DESIGN SPECIFICATIONS, REFERENCE SPECIFICATIONS, REFERENCE BOARDS, FILES, DRAWINGS, DIAGNOSTICS, LISTS AND OTHER DOCUMENTS OR INFORMATION (TOGETHER AND SEPARATELY, 'MATERIALS') ARE BEING PROVIDED 'AS IS'. THE MATERIALS MAY CONTAIN KNOWN AND UNKNOWN VIOLATIONS OR DEVIATIONS OF INDUSTRY STANDARDS AND SPECIFICATIONS. NVIDIA MAKES NO WARRANTIES, EXPRESSED, IMPLIED, STATUTORY OR OTHERWISE WITH RESPECT TO THE MATERIALS OR OTHERWISE, AND EXPRESSLY DISCLAIMS ALL IMPLIED WARRANTIES INCLUDING, WITHOUT LIMITATION, THE WARRANTIES OF DESIGN, OF NONINFRINGEMENT, MERCHANTABILITY OR FITNESS FOR A PARTICULAR PURPOSE, OR ARISING FROM A COURSE OF DEALING, TRADE USAGE, TRADE PRACTICE, OR INDUSTRY STANDARDS.

NVIDIA CORPORATION
2701 SAN TOMAS EXPRESSWAY
SANTA CLARA, CA 95050, USA

NV_PN	600-1G180-0002-300		
PCB REV	PG180-A02	PAGE	15 OF 54
BOM REV	B	DATE	21-JUN-2018

Page16: GPU Decoupling

FBVDDQ

FBVDDQ

Partition A

6x 1uF and 2x 10uF

C1241 0.47uF 6.3V 20% X6S 0201W COMMON
C1243 0.47uF 6.3V 20% X6S 0201W COMMON
C1235 0.47uF 6.3V 20% X6S 0201W COMMON
C1261 0.47uF 6.3V 20% X6S 0201W COMMON
C1250 0.47uF 6.3V 20% X6S 0201W COMMON
C1266 0.47uF 6.3V 20% X6S 0201W COMMON
C1251 10uF 4V 20% X6S 0603 COMMON
C1248 10uF 4V 20% X6S 0603 COMMON
GND

C1232 0.47uF 6.3V 20% X6S 0201W COMMON
C1259 0.47uF 6.3V 20% X6S 0201W COMMON
C1260 0.47uF 6.3V 20% X6S 0201W COMMON
C1237 0.47uF 6.3V 20% X6S 0201W COMMON
C1258 0.47uF 6.3V 20% X6S 0201W COMMON
C1245 0.47uF 6.3V 20% X6S 0201W COMMON
GND

Partition B

6x 1uF and 2x 10uF

C1343 0.47uF 6.3V 20% X6S 0201W COMMON
C1481 0.47uF 6.3V 20% X6S 0201W COMMON
C1398 0.47uF 6.3V 20% X6S 0201W COMMON
C1269 0.47uF 6.3V 20% X6S 0201W COMMON
C1344 0.47uF 6.3V 20% X6S 0201W COMMON
C1522 0.47uF 6.3V 20% X6S 0201W COMMON
C1244 10uF 4V 20% X6S 0603 COMMON
C1321 10uF 4V 20% X6S 0603 COMMON
GND

C1294 0.47uF 6.3V 20% X6S 0201W COMMON
C1239 0.47uF 6.3V 20% X6S 0201W COMMON
C1469 0.47uF 6.3V 20% X6S 0201W COMMON
C1406 0.47uF 6.3V 20% X6S 0201W COMMON
C1277 0.47uF 6.3V 20% X6S 0201W COMMON
C1435 0.47uF 6.3V 20% X6S 0201W COMMON
GND

Partition C

6x 1uF and 2x 10uF

C1653 0.47uF 6.3V 20% X6S 0201W COMMON
C1523 0.47uF 6.3V 20% X6S 0201W COMMON
C1586 0.47uF 6.3V 20% X6S 0201W COMMON
C1713 0.47uF 6.3V 20% X6S 0201W COMMON
C1582 0.47uF 6.3V 20% X6S 0201W COMMON
C1615 0.47uF 6.3V 20% X6S 0201W COMMON
C1381 10uF 4V 20% X6S 0603 COMMON
C1453 10uF 4V 20% X6S 0603 COMMON
GND

C1627 0.47uF 6.3V 20% X6S 0201W COMMON
C1610 0.47uF 6.3V 20% X6S 0201W COMMON
C1467 0.47uF 6.3V 20% X6S 0201W COMMON
C1572 0.47uF 6.3V 20% X6S 0201W COMMON
C1557 0.47uF 6.3V 20% X6S 0201W COMMON
C1711 0.47uF 6.3V 20% X6S 0201W COMMON
GND

Partition D

6x 1uF and 2x 10uF

C1697 0.47uF 6.3V 20% X6S 0201W COMMON
C1673 0.47uF 6.3V 20% X6S 0201W COMMON
C1674 0.47uF 6.3V 20% X6S 0201W COMMON
C1700 0.47uF 6.3V 20% X6S 0201W COMMON
C1672 0.47uF 6.3V 20% X6S 0201W COMMON
C1668 0.47uF 6.3V 20% X6S 0201W COMMON
C1708 10uF 4V 20% X6S 0603 COMMON
C1683 10uF 4V 20% X6S 0603 COMMON
GND

C1696 0.47uF 6.3V 20% X6S 0201W COMMON
C1699 0.47uF 6.3V 20% X6S 0201W COMMON
C1698 0.47uF 6.3V 20% X6S 0201W COMMON
C1669 0.47uF 6.3V 20% X6S 0201W COMMON
C1703 0.47uF 6.3V 20% X6S 0201W COMMON
C1666 0.47uF 6.3V 20% X6S 0201W COMMON
GND

Place Close to GPU

C1637 10uF 4V 20% X6S 0603 COMMON
C1682 10uF 4V 20% X6S 0603 COMMON
C1687 10uF 4V 20% X6S 0603 COMMON
C1679 10uF 4V 20% X6S 0603 COMMON
GND

Place Close to GPU

C1543 22uF 4V 20% X6S 0603W COMMON
C1249 22uF 4V 20% X6S 0603W COMMON
C1504 22uF 4V 20% X6S 0603W COMMON
C1684 22uF 4V 20% X6S 0603W COMMON
C1791 22uF 4V 20% X6S 0603W COMMON
C1247 22uF 4V 20% X6S 0603W COMMON
C1789 22uF 4V 20% X6S 0603W COMMON
C1153 22uF 4V 20% X6S 0603W COMMON
C1278 22uF 4V 20% X6S 0603W COMMON
GND

NVVDD

NVVDD

C1233 47uF 4V 20% X6S 0805 COMMON
C1617 47uF 4V 20% X6S 0805 COMMON
C1236 47uF 4V 20% X6S 0805 COMMON
GND

C1496 47uF 4V 20% X6S 0805 COMMON
C1556 47uF 4V 20% X6S 0805 COMMON
C1220 47uF 4V 20% X6S 0805 COMMON
C1229 47uF 4V 20% X6S 0805 COMMON
C1439 10uF 4V 20% X6S 0603 COMMON
C1246 10uF 4V 20% X6S 0603 COMMON
GND

C1264 10uF 4V 20% X6S 0603 COMMON
C1263 10uF 4V 20% X6S 0603 COMMON
C1530 10uF 4V 20% X6S 0603 COMMON
C1520 10uF 4V 20% X6S 0603 COMMON
C1234 10uF 4V 20% X6S 0603 COMMON
C1423 10uF 4V 20% X6S 0603 COMMON
C1493 10uF 4V 20% X6S 0603 COMMON
C1597 10uF 4V 20% X6S 0603 COMMON
GND

C1332 0.47uF 6.3V 20% X6S 0201W COMMON
C1640 0.47uF 6.3V 20% X6S 0201W COMMON
C1490 0.47uF 6.3V 20% X6S 0201W COMMON
C1529 0.47uF 6.3V 20% X6S 0201W COMMON
C1559 0.47uF 6.3V 20% X6S 0201W COMMON
C1353 0.47uF 6.3V 20% X6S 0201W COMMON
C1443 0.47uF 6.3V 20% X6S 0201W COMMON
C1375 0.47uF 6.3V 20% X6S 0201W COMMON
C1322 0.47uF 6.3V 20% X6S 0201W COMMON
C1525 0.47uF 6.3V 20% X6S 0201W COMMON
C1480 0.47uF 6.3V 20% X6S 0201W COMMON
C1494 0.47uF 6.3V 20% X6S 0201W COMMON
C1509 0.47uF 6.3V 20% X6S 0201W COMMON
C1514 0.47uF 6.3V 20% X6S 0201W COMMON
C1528 0.47uF 6.3V 20% X6S 0201W COMMON
GND

C1307 0.47uF 6.3V 20% X6S 0201W COMMON
C1470 0.47uF 6.3V 20% X6S 0201W COMMON
C1422 0.47uF 6.3V 20% X6S 0201W COMMON
C1495 0.47uF 6.3V 20% X6S 0201W COMMON
C1633 0.47uF 6.3V 20% X6S 0201W COMMON
C1345 0.47uF 6.3V 20% X6S 0201W COMMON
C1271 0.47uF 6.3V 20% X6S 0201W COMMON
C1445 0.47uF 6.3V 20% X6S 0201W COMMON
C1390 0.47uF 6.3V 20% X6S 0201W COMMON
C1505 0.47uF 6.3V 20% X6S 0201W COMMON
C1404 0.47uF 6.3V 20% X6S 0201W COMMON
C1419 0.47uF 6.3V 20% X6S 0201W COMMON
C1433 0.47uF 6.3V 20% X6S 0201W COMMON
C1444 0.47uF 6.3V 20% X6S 0201W COMMON
C1457 0.47uF 6.3V 20% X6S 0201W COMMON
GND

C1515 0.47uF 6.3V 20% X6S 0201W COMMON
C1579 0.47uF 6.3V 20% X6S 0201W COMMON
C1576 0.47uF 6.3V 20% X6S 0201W COMMON
C1366 0.47uF 6.3V 20% X6S 0201W COMMON
C1394 0.47uF 6.3V 20% X6S 0201W COMMON
C1331 0.47uF 6.3V 20% X6S 0201W COMMON
C1639 0.47uF 6.3V 20% X6S 0201W COMMON
C1380 0.47uF 6.3V 20% X6S 0201W COMMON
C1566 0.47uF 6.3V 20% X6S 0201W COMMON
C1482 0.47uF 6.3V 20% X6S 0201W COMMON
C1354 0.47uF 6.3V 20% X6S 0201W COMMON
C1411 0.47uF 6.3V 20% X6S 0201W COMMON
C1424 0.47uF 6.3V 20% X6S 0201W COMMON
C1309 0.47uF 6.3V 20% X6S 0201W COMMON
C1270 0.47uF 6.3V 20% X6S 0201W COMMON
GND

C1622 0.47uF 6.3V 20% X6S 0201W COMMON
C1461 0.47uF 6.3V 20% X6S 0201W COMMON
C1403 0.47uF 6.3V 20% X6S 0201W COMMON
C1362 0.47uF 6.3V 20% X6S 0201W COMMON
C1337 0.47uF 6.3V 20% X6S 0201W COMMON
C1305 0.47uF 6.3V 20% X6S 0201W COMMON
C1533 0.47uF 6.3V 20% X6S 0201W COMMON
C1619 0.47uF 6.3V 20% X6S 0201W COMMON
C1507 0.47uF 6.3V 20% X6S 0201W COMMON
C1392 0.47uF 6.3V 20% X6S 0201W COMMON
C1550 0.47uF 6.3V 20% X6S 0201W COMMON
C1578 0.47uF 6.3V 20% X6S 0201W COMMON
C1430 0.47uF 6.3V 20% X6S 0201W COMMON
C1635 0.47uF 6.3V 20% X6S 0201W COMMON
C1626 0.47uF 6.3V 20% X6S 0201W COMMON
GND

C1459 0.47uF 6.3V 20% X6S 0201W COMMON
C1434 0.47uF 6.3V 20% X6S 0201W COMMON
C1475 0.47uF 6.3V 20% X6S 0201W COMMON
C1330 0.47uF 6.3V 20% X6S 0201W COMMON
C1349 0.47uF 6.3V 20% X6S 0201W COMMON
C1449 0.47uF 6.3V 20% X6S 0201W COMMON
C1510 0.47uF 6.3V 20% X6S 0201W COMMON
C1296 0.47uF 6.3V 20% X6S 0201W COMMON
C1396 0.47uF 6.3V 20% X6S 0201W COMMON
C1368 0.47uF 6.3V 20% X6S 0201W COMMON
C1417 0.47uF 6.3V 20% X6S 0201W COMMON
C1544 0.47uF 6.3V 20% X6S 0201W COMMON
C1290 0.47uF 6.3V 20% X6S 0201W COMMON
C1638 0.47uF 6.3V 20% X6S 0201W COMMON
C1283 0.47uF 6.3V 20% X6S 0201W COMMON
GND

C1281 0.47uF 6.3V 20% X6S 0201W COMMON
C1540 0.47uF 6.3V 20% X6S 0201W COMMON
C1448 0.47uF 6.3V 20% X6S 0201W COMMON
C1312 0.47uF 6.3V 20% X6S 0201W COMMON
C1320 0.47uF 6.3V 20% X6S 0201W COMMON
C1460 0.47uF 6.3V 20% X6S 0201W COMMON
C1466 0.47uF 6.3V 20% X6S 0201W COMMON
C1465 0.47uF 6.3V 20% X6S 0201W COMMON
C1393 0.47uF 6.3V 20% X6S 0201W COMMON
C1581 0.47uF 6.3V 20% X6S 0201W COMMON
C1335 0.47uF 6.3V 20% X6S 0201W COMMON
C1351 0.47uF 6.3V 20% X6S 0201W COMMON
C1570 0.47uF 6.3V 20% X6S 0201W COMMON
C1585 0.47uF 6.3V 20% X6S 0201W COMMON
C1602 0.47uF 6.3V 20% X6S 0201W COMMON
GND

C1438 0.47uF 6.3V 20% X6S 0201W COMMON
C1555 0.47uF 6.3V 20% X6S 0201W COMMON
C1364 0.47uF 6.3V 20% X6S 0201W COMMON
C1421 0.47uF 6.3V 20% X6S 0201W COMMON
C1308 0.47uF 6.3V 20% X6S 0201W COMMON
C1383 0.47uF 6.3V 20% X6S 0201W COMMON
C1456 0.47uF 6.3V 20% X6S 0201W COMMON
C1489 0.47uF 6.3V 20% X6S 0201W COMMON
C1339 0.47uF 6.3V 20% X6S 0201W COMMON
C1601 0.47uF 6.3V 20% X6S 0201W COMMON
C1319 0.47uF 6.3V 20% X6S 0201W COMMON
C1521 0.47uF 6.3V 20% X6S 0201W COMMON
C1512 0.47uF 6.3V 20% X6S 0201W COMMON
C1623 0.47uF 6.3V 20% X6S 0201W COMMON
C1613 0.47uF 6.3V 20% X6S 0201W COMMON
GND

C1562 0.47uF 6.3V 20% X6S 0201W COMMON
C1569 0.47uF 6.3V 20% X6S 0201W COMMON
C1554 0.47uF 6.3V 20% X6S 0201W COMMON
C1551 0.47uF 6.3V 20% X6S 0201W COMMON
C1295 0.47uF 6.3V 20% X6S 0201W COMMON
C1363 0.47uF 6.3V 20% X6S 0201W COMMON
C1324 0.47uF 6.3V 20% X6S 0201W COMMON
C1455 0.47uF 6.3V 20% X6S 0201W COMMON
C1468 0.47uF 6.3V 20% X6S 0201W COMMON
C1476 0.47uF 6.3V 20% X6S 0201W COMMON
C1611 0.47uF 6.3V 20% X6S 0201W COMMON
C1596 0.47uF 6.3V 20% X6S 0201W COMMON
C1408 0.47uF 6.3V 20% X6S 0201W COMMON
C1592 0.47uF 6.3V 20% X6S 0201W COMMON
C1567 0.47uF 6.3V 20% X6S 0201W COMMON
C1273 0.47uF 6.3V 20% X6S 0201W COMMON
C1539 0.47uF 6.3V 20% X6S 0201W COMMON
GND

032-0532-000
X6S
0805

1V8_AON

1V8_AON

C1726 4.7uF 4V 10% X6S 0603 COMMON
C1843 4.7uF 4V 10% X6S 0603 COMMON
C1827 4.7uF 4V 10% X6S 0603 COMMON
C1632 0.47uF 6.3V 20% X6S 0201W COMMON
C1641 0.47uF 6.3V 20% X6S 0201W COMMON
C1801 0.47uF 6.3V 20% X6S 0201W COMMON
C1821 0.47uF 6.3V 20% X6S 0201W COMMON
C1678 0.47uF 6.3V 20% X6S 0201W COMMON
C1658 0.47uF 6.3V 20% X6S 0201W COMMON
GND

Near the GPU

1V8_AON

C1815 0.47uF 6.3V 20% X6S 0201W COMMON
C1819 0.47uF 6.3V 20% X6S 0201W COMMON
C1805 0.47uF 6.3V 20% X6S 0201W COMMON
C1828 0.47uF 6.3V 20% X6S 0201W COMMON
C1652 0.47uF 6.3V 20% X6S 0201W COMMON
C1688 0.47uF 6.3V 20% X6S 0201W COMMON
C1644 0.47uF 6.3V 20% X6S 0201W COMMON
GND

Under the GPU

NVVDD

NVVDD

C1369 47uF 4V 20% X6S 0805 COMMON
C1625 10uF 4V 20% X6S 0603 COMMON
C1252 10uF 4V 20% X6S 0603 COMMON
C1387 10uF 4V 20% X6S 0603 COMMON
C1297 10uF 4V 20% X6S 0603 COMMON
GND

C1608 0.47uF 6.3V 20% X6S 0201W COMMON
C1477 0.47uF 6.3V 20% X6S 0201W COMMON
C1340 0.47uF 6.3V 20% X6S 0201W COMMON
C1414 0.47uF 6.3V 20% X6S 0201W COMMON
C1536 0.47uF 6.3V 20% X6S 0201W COMMON
C1282 0.47uF 6.3V 20% X6S 0201W COMMON
C1298 0.47uF 6.3V 20% X6S 0201W COMMON
C1487 0.47uF 6.3V 20% X6S 0201W COMMON
GND

C1347 0.47uF 6.3V 20% X6S 0201W COMMON
C1384 0.47uF 6.3V 20% X6S 0201W COMMON
C1647 0.47uF 6.3V 20% X6S 0201W COMMON
C1293 0.47uF 6.3V 20% X6S 0201W COMMON
C1318 0.47uF 6.3V 20% X6S 0201W COMMON
C1437 0.47uF 6.3V 20% X6S 0201W COMMON
C1628 0.47uF 6.3V 20% X6S 0201W COMMON
GND

C1272 0.47uF 6.3V 20% X6S 0201W COMMON
C1511 0.47uF 6.3V 20% X6S 0201W COMMON
C1497 0.47uF 6.3V 20% X6S 0201W COMMON
C1462 0.47uF 6.3V 20% X6S 0201W COMMON
C1317 0.47uF 6.3V 20% X6S 0201W COMMON
C1485 0.47uF 6.3V 20% X6S 0201W COMMON
GND

0001796 MSI CONFIDENTIAL
RD(C)2190636 Jenkins
KH科技

ASSEMBLY	SKU SCHEMATIC, COMMON & NO_STUFF ASSEMBLY NOTES AND FINAL BOM
PAGE DETAIL	GPU Decoupling

ALL NVIDIA DESIGN SPECIFICATIONS, REFERENCE SPECIFICATIONS, REFERENCE BOARDS, FILES, DRAWINGS, DIAGNOSTICS, LISTS AND OTHER DOCUMENTS OR INFORMATION (TOGETHER AND SEPARATELY, 'MATERIALS') ARE BEING PROVIDED 'AS IS'. THE MATERIALS MAY CONTAIN KNOWN AND UNKNOWN VIOLATIONS OR DEVIATIONS OF INDUSTRY STANDARDS AND SPECIFICATIONS. NVIDIA MAKES NO WARRANTIES, EXPRESSED, IMPLIED, STATUTORY OR OTHERWISE WITH RESPECT TO THE MATERIALS OR OTHERWISE, AND EXPRESSLY DISCLAIMS ALL IMPLIED WARRANTIES INCLUDING, WITHOUT LIMITATION, THE WARRANTIES OF DESIGN, OF NONINFRINGEMENT, MERCHANTABILITY OR FITNESS FOR A PARTICULAR PURPOSE, OR ARISING FROM A COURSE OF DEALING, TRADE USAGE, TRADE PRACTICE, OR INDUSTRY STANDARDS.

NVIDIA CORPORATION
2701 SAN TOMAS EXPRESSWAY
SANTA CLARA, CA 95050, USA

NV_PN	600-1G180-0002-300		
PCB REV	PG180-A02	PAGE	16 OF 54
BOM REV	B	DATE	21-JUN-2018

Page17: GPU Decoupling

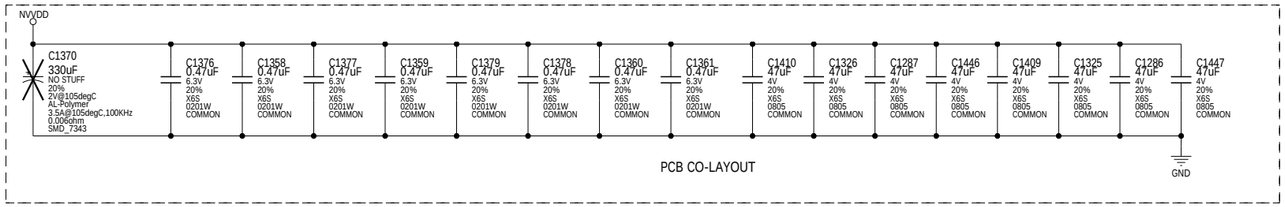

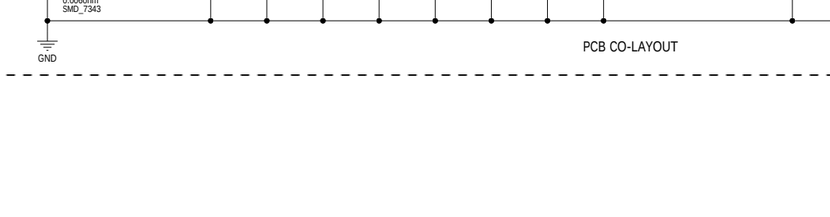

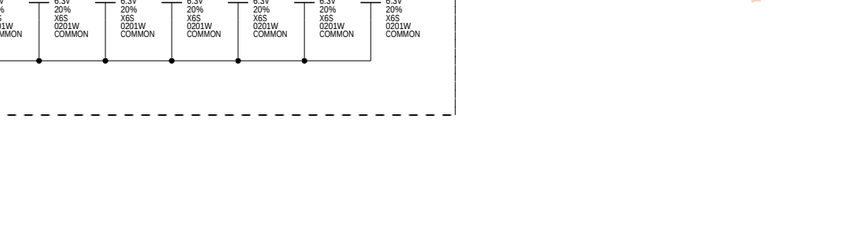

ALL NVIDIA DESIGN SPECIFICATIONS, REFERENCE SPECIFICATIONS, REFERENCE BOARDS, FILES, DRAWINGS, DIAGNOSTICS, LISTS AND OTHER DOCUMENTS OR INFORMATION (TOGETHER AND SEPARATELY, 'MATERIALS') ARE BEING PROVIDED 'AS IS'. THE MATERIALS MAY CONTAIN KNOWN AND UNKNOWN VIOLATIONS OR DEVIATIONS OF INDUSTRY STANDARDS AND SPECIFICATIONS. NVIDIA MAKES NO WARRANTIES, EXPRESSED, IMPLIED, STATUTORY OR OTHERWISE WITH RESPECT TO THE MATERIALS OR OTHERWISE, AND EXPRESSLY DISCLAIMS ALL IMPLIED WARRANTIES INCLUDING, WITHOUT LIMITATION, THE WARRANTIES OF DESIGN, OF NONINFRINGEMENT, MERCHANTABILITY OR FITNESS FOR A PARTICULAR PURPOSE, OR ARISING FROM A COURSE OF DEALING, TRADE USAGE, TRADE PRACTICE, OR INDUSTRY STANDARDS.

ASSEMBLY	SKU SCHEMATIC, COMMON & NO_STUFF ASSEMBLY NOTES AND FINAL BOM
PAGE DETAIL	GPU DECOUPLING

NVIDIA CORPORATION
2701 SAN TOMAS EXPRESSWAY
SANTA CLARA, CA 95050, USA

NV_PN	600-1G180-0002-300		
PCB REV	PG180-A02	PAGE	17 OF 54
BOM REV	B	DATE	21-JUN-2018

MSI CONFIDENTIAL
0001796 7
RD(6)-20190801
(00068760)
RMA工程課

PAGE 18: IFPAB Tall-DP

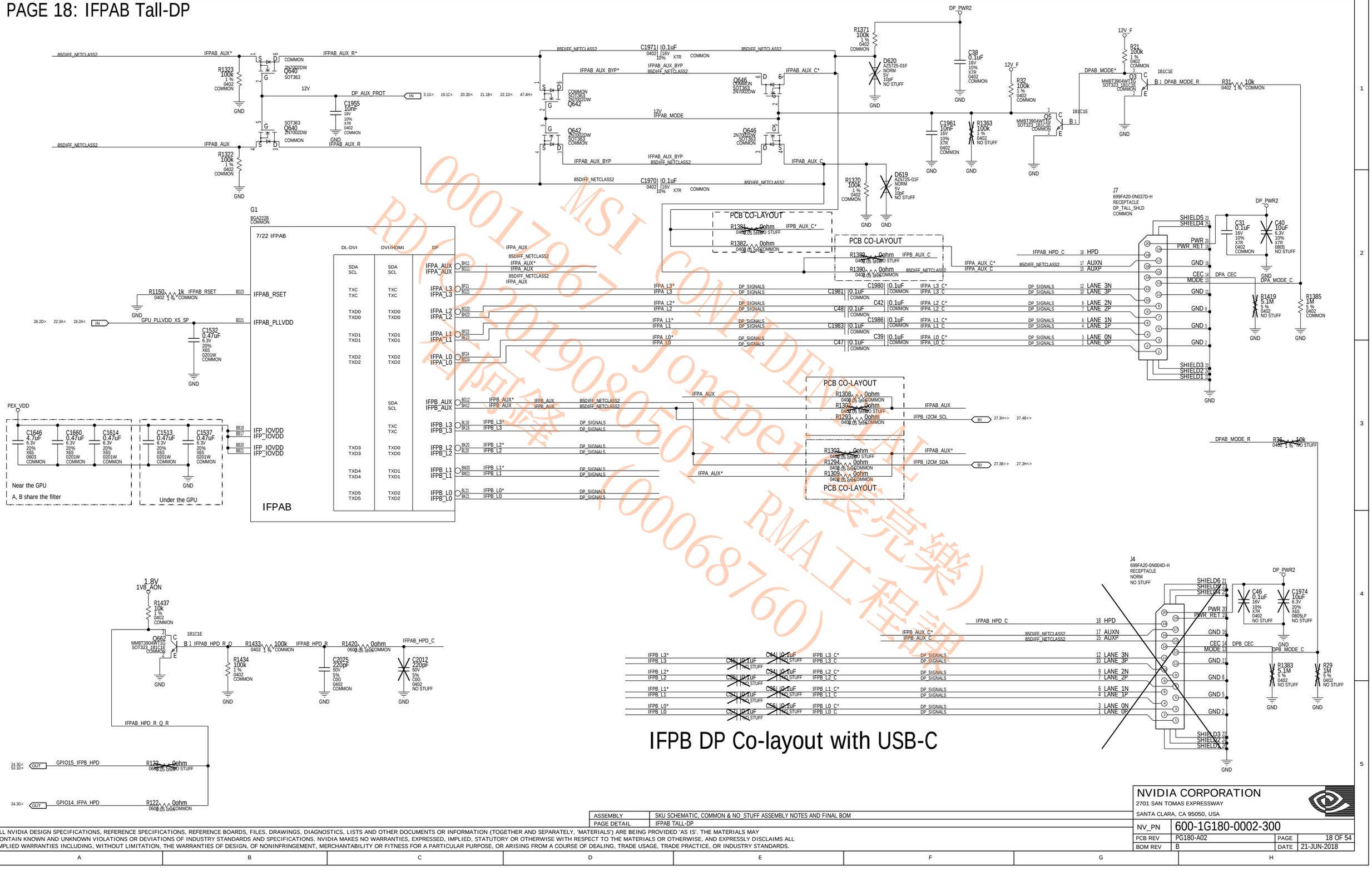

IFPB DP Co-layout with USB-C

0001796 7 Jones
MSI CONFIDENTIAL
RD (2019080501 (000068760)
RMA工程用
(Inspur浪潮完樂)

ASSEMBLY	SKU SCHEMATIC, COMMON & NO_STUFF ASSEMBLY NOTES AND FINAL BOM
PAGE DETAIL	IFPAB TALL-DP

ALL NVIDIA DESIGN SPECIFICATIONS, REFERENCE SPECIFICATIONS, REFERENCE BOARDS, FILES, DRAWINGS, DIAGNOSTICS, LISTS AND OTHER DOCUMENTS OR INFORMATION (TOGETHER AND SEPARATELY, 'MATERIALS') ARE BEING PROVIDED 'AS IS'. THE MATERIALS MAY CONTAIN KNOWN AND UNKNOWN VIOLATIONS OR DEVIATIONS OF INDUSTRY STANDARDS AND SPECIFICATIONS. NVIDIA MAKES NO WARRANTIES, EXPRESSED, IMPLIED, STATUTORY OR OTHERWISE WITH RESPECT TO THE MATERIALS OR OTHERWISE, AND EXPRESSLY DISCLAIMS ALL IMPLIED WARRANTIES INCLUDING, WITHOUT LIMITATION, THE WARRANTIES OF DESIGN, OF NONINFRINGEMENT, MERCHANTABILITY OR FITNESS FOR A PARTICULAR PURPOSE, OR ARISING FROM A COURSE OF DEALING, TRADE USAGE, TRADE PRACTICE, OR INDUSTRY STANDARDS.

NVIDIA CORPORATION
2701 SAN TOMAS EXPRESSWAY
SANTA CLARA, CA 95050, USA

NV_PN	600-1G180-0002-300		
PCB REV	PG180-A02	PAGE	18 OF 54
BOM REV	B	DATE	21-JUN-2018

PAGE 19: IFPE DP

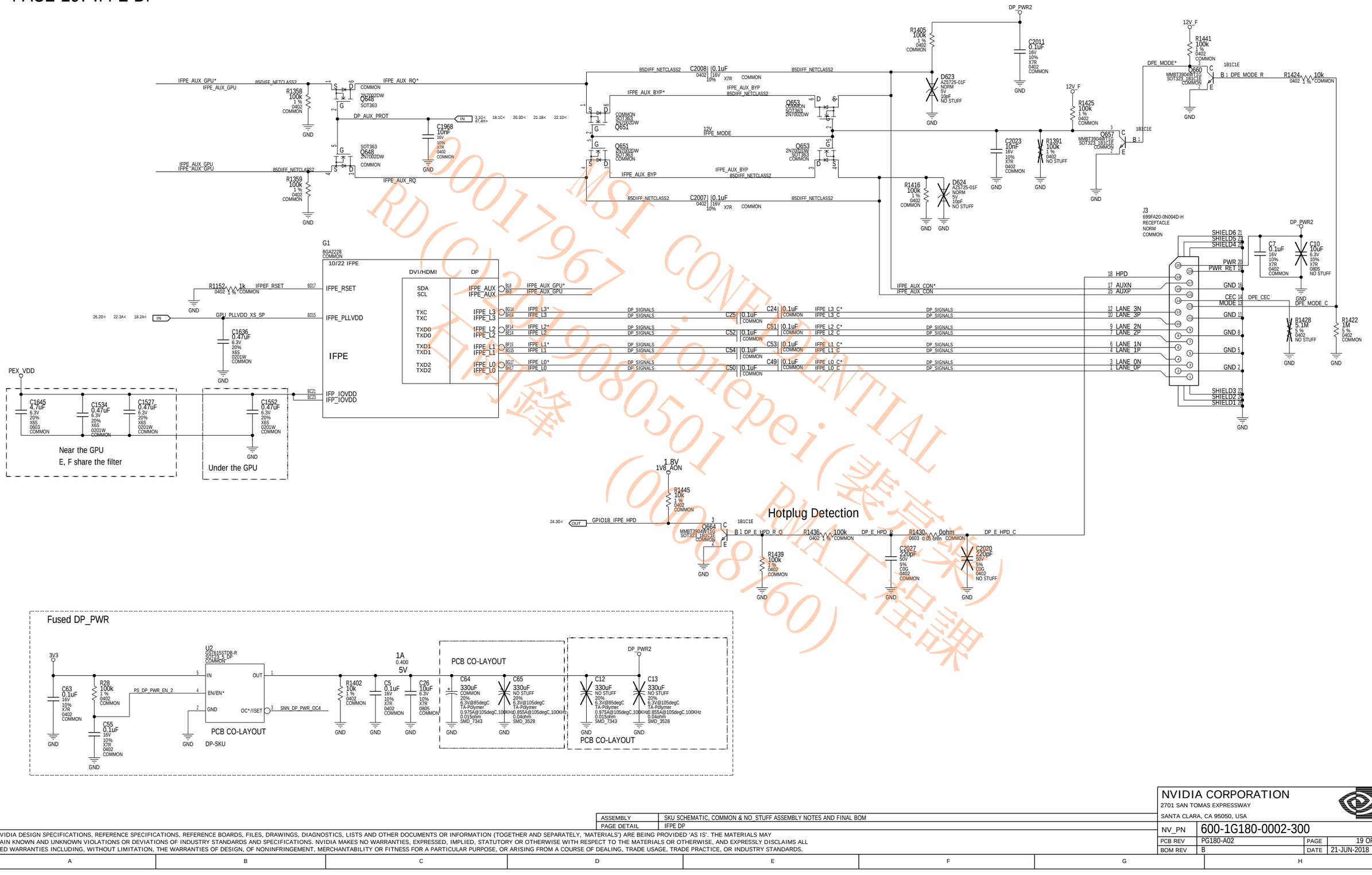

900017967 MSI CONFIDENTIAL
RD(C)2019080501 Jonepei(紫宸)
KT刘锋 (06008760) PWA工程課

ASSEMBLY	SKU SCHEMATIC, COMMON & NO_STUFF ASSEMBLY NOTES AND FINAL BOM
PAGE DETAIL	IFPE DP

ALL NVIDIA DESIGN SPECIFICATIONS, REFERENCE SPECIFICATIONS, REFERENCE BOARDS, FILES, DRAWINGS, DIAGNOSTICS, LISTS AND OTHER DOCUMENTS OR INFORMATION (TOGETHER AND SEPARATELY, 'MATERIALS') ARE BEING PROVIDED 'AS IS'. THE MATERIALS MAY CONTAIN KNOWN AND UNKNOWN VIOLATIONS OR DEVIATIONS OF INDUSTRY STANDARDS AND SPECIFICATIONS. NVIDIA MAKES NO WARRANTIES, EXPRESSED, IMPLIED, STATUTORY OR OTHERWISE WITH RESPECT TO THE MATERIALS OR OTHERWISE, AND EXPRESSLY DISCLAIMS ALL IMPLIED WARRANTIES INCLUDING, WITHOUT LIMITATION, THE WARRANTIES OF DESIGN, OF NONINFRINGEMENT, MERCHANTABILITY OR FITNESS FOR A PARTICULAR PURPOSE, OR ARISING FROM A COURSE OF DEALING, TRADE USAGE, TRADE PRACTICE, OR INDUSTRY STANDARDS.

NVIDIA CORPORATION
2701 SAN TOMAS EXPRESSWAY
SANTA CLARA, CA 95050, USA

NV_PN	600-1G180-0002-300		
PCB REV	PG180-A02	PAGE	19 OF 54
BOM REV	B	DATE	21-JUN-2018

PAGE 20: IFPF USBC

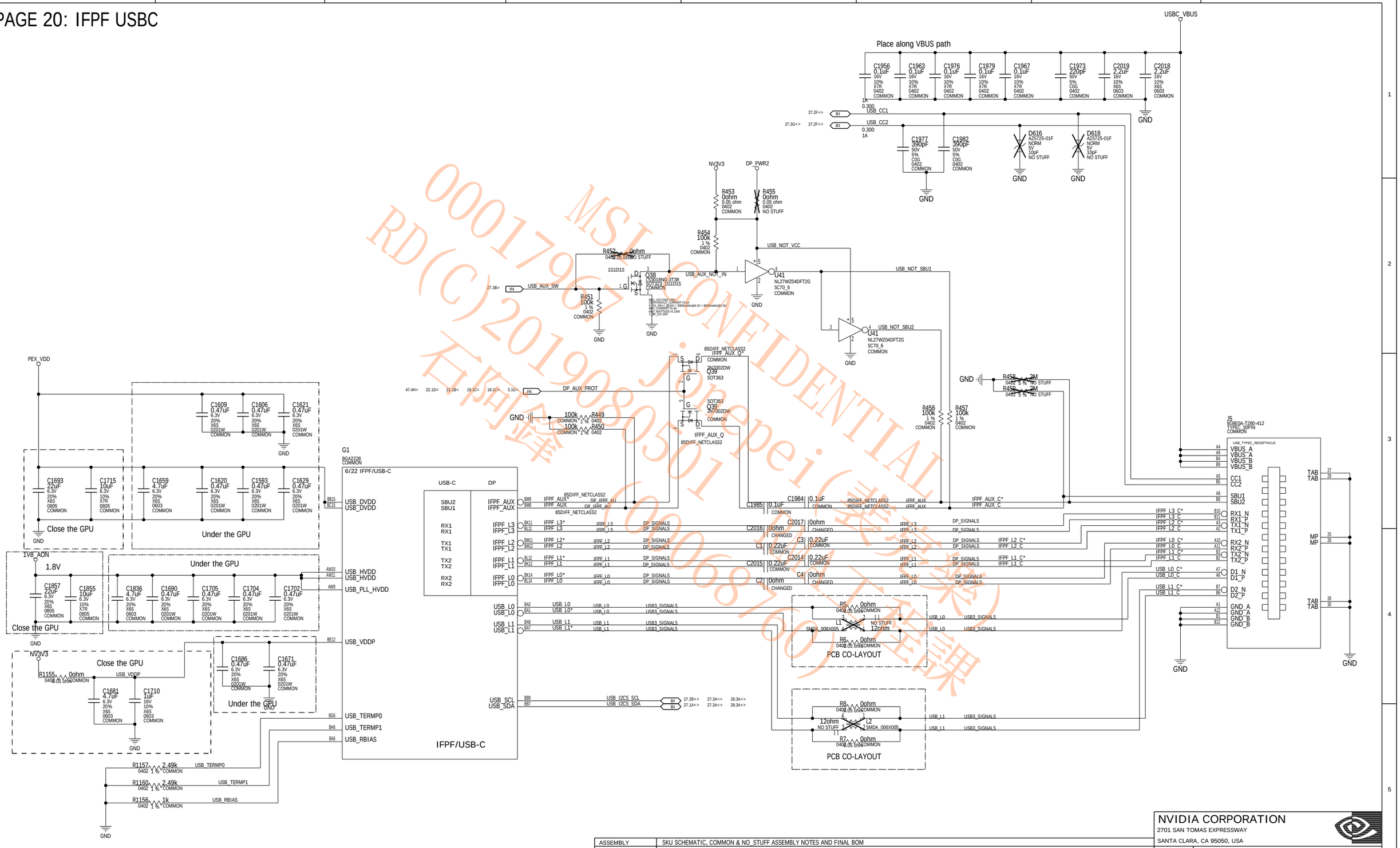

MSI CONFIDENTIAL
0001796 Jonepei(琼沛)
RD(C)20190805-
(0006760) 石炳锋 保密

ASSEMBLY	SKU SCHEMATIC, COMMON & NO_STUFF ASSEMBLY NOTES AND FINAL BOM
PAGE DETAIL	IFPF USBC

ALL NVIDIA DESIGN SPECIFICATIONS, REFERENCE SPECIFICATIONS, REFERENCE BOARDS, FILES, DRAWINGS, DIAGNOSTICS, LISTS AND OTHER DOCUMENTS OR INFORMATION (TOGETHER AND SEPARATELY, 'MATERIALS') ARE BEING PROVIDED 'AS IS'. THE MATERIALS MAY CONTAIN KNOWN AND UNKNOWN VIOLATIONS OR DEVIATIONS OF INDUSTRY STANDARDS AND SPECIFICATIONS. NVIDIA MAKES NO WARRANTIES, EXPRESSED, IMPLIED, STATUTORY OR OTHERWISE WITH RESPECT TO THE MATERIALS OR OTHERWISE, AND EXPRESSLY DISCLAIMS ALL IMPLIED WARRANTIES INCLUDING, WITHOUT LIMITATION, THE WARRANTIES OF DESIGN, OF NONINFRINGEMENT, MERCHANTABILITY OR FITNESS FOR A PARTICULAR PURPOSE, OR ARISING FROM A COURSE OF DEALING, TRADE USAGE, TRADE PRACTICE, OR INDUSTRY STANDARDS.

NVIDIA CORPORATION
2701 SAN TOMAS EXPRESSWAY
SANTA CLARA, CA 95050, USA

NV_PN	600-1G180-0002-300		
PCB REV	PG180-A02	PAGE	20 OF 54
BOM REV	B	DATE	21-JUN-2018

PAGE 21: IFPC HDMI 2.0/DP

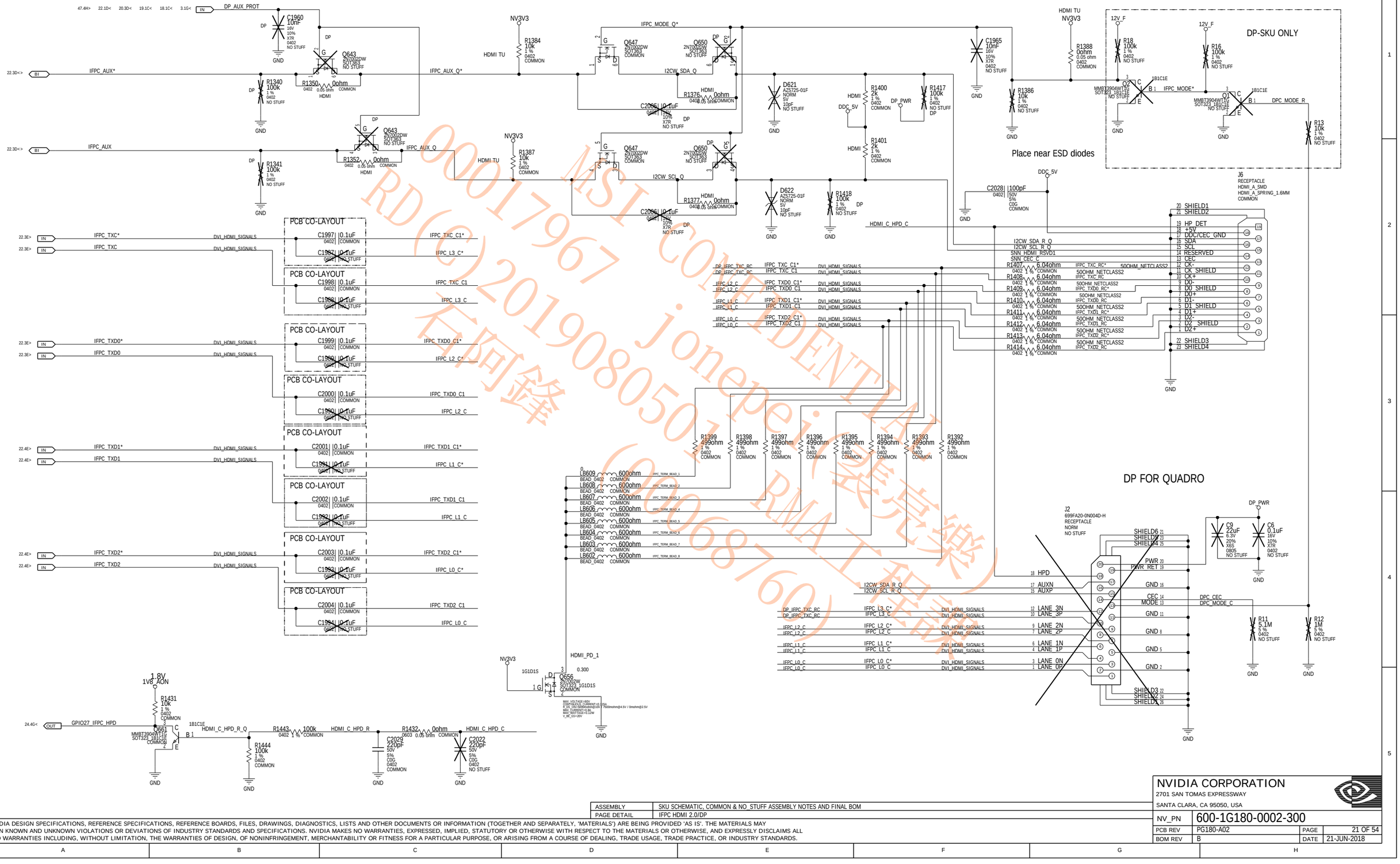

00017967 MSI CONFIDENTIAL jonepei.li RD(G)20190805 石阿锋 RMA工程 (0)0687600

ASSEMBLY	SKU SCHEMATIC, COMMON & NO_STUFF ASSEMBLY NOTES AND FINAL BOM
PAGE DETAIL	IFPC HDMI 2.0/DP

ALL NVIDIA DESIGN SPECIFICATIONS, REFERENCE SPECIFICATIONS, REFERENCE BOARDS, FILES, DRAWINGS, DIAGNOSTICS, LISTS AND OTHER DOCUMENTS OR INFORMATION (TOGETHER AND SEPARATELY, 'MATERIALS') ARE BEING PROVIDED 'AS IS'. THE MATERIALS MAY CONTAIN KNOWN AND UNKNOWN VIOLATIONS OR DEVIATIONS OF INDUSTRY STANDARDS AND SPECIFICATIONS. NVIDIA MAKES NO WARRANTIES, EXPRESSED, IMPLIED, STATUTORY OR OTHERWISE WITH RESPECT TO THE MATERIALS OR OTHERWISE, AND EXPRESSLY DISCLAIMS ALL IMPLIED WARRANTIES INCLUDING, WITHOUT LIMITATION, THE WARRANTIES OF DESIGN, OF NONINFRINGEMENT, MERCHANTABILITY OR FITNESS FOR A PARTICULAR PURPOSE, OR ARISING FROM A COURSE OF DEALING, TRADE USAGE, TRADE PRACTICE, OR INDUSTRY STANDARDS.

NVIDIA CORPORATION
2701 SAN TOMAS EXPRESSWAY
SANTA CLARA, CA 95050, USA

NV_PN	600-1G180-0002-300		
PCB REV	PG180-A02	PAGE	21 OF 54
BOM REV	B	DATE	21-JUN-2018

PAGE 22: IFPD DP

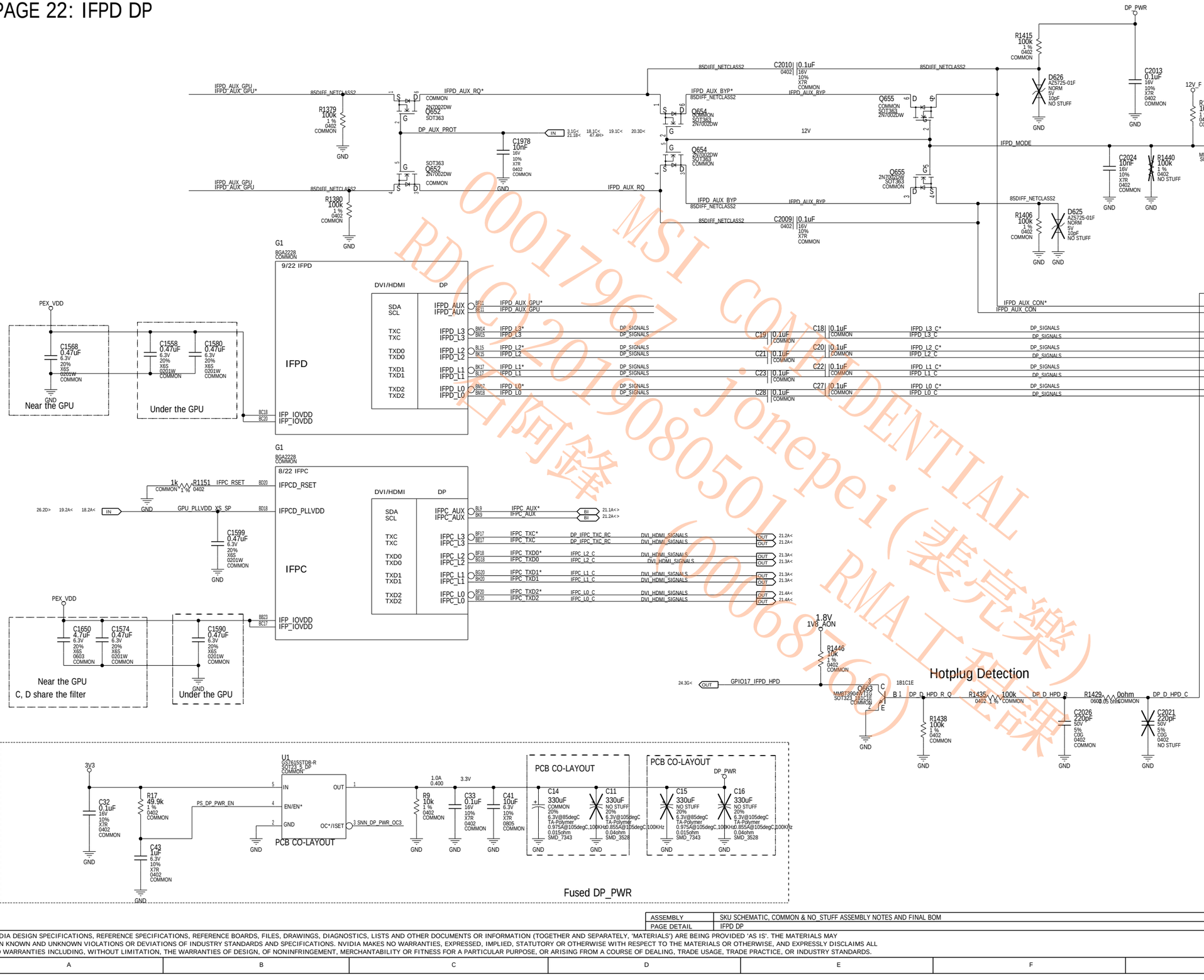

MSI CONFIDENTIAL
0001796 Jonepei(裴完樂)
RD(C)20190805
RMA工程課
0006876(60)

ASSEMBLY	SKU SCHEMATIC, COMMON & NO_STUFF ASSEMBLY NOTES AND FINAL BOM
PAGE DETAIL	IFPD DP

ALL NVIDIA DESIGN SPECIFICATIONS, REFERENCE SPECIFICATIONS, REFERENCE BOARDS, FILES, DRAWINGS, DIAGNOSTICS, LISTS AND OTHER DOCUMENTS OR INFORMATION (TOGETHER AND SEPARATELY, 'MATERIALS') ARE BEING PROVIDED 'AS IS'. THE MATERIALS MAY CONTAIN KNOWN AND UNKNOWN VIOLATIONS OR DEVIATIONS OF INDUSTRY STANDARDS AND SPECIFICATIONS. NVIDIA MAKES NO WARRANTIES, EXPRESSED, IMPLIED, STATUTORY OR OTHERWISE WITH RESPECT TO THE MATERIALS OR OTHERWISE, AND EXPRESSLY DISCLAIMS ALL IMPLIED WARRANTIES INCLUDING, WITHOUT LIMITATION, THE WARRANTIES OF DESIGN, OF NONINFRINGEMENT, MERCHANTABILITY OR FITNESS FOR A PARTICULAR PURPOSE, OR ARISING FROM A COURSE OF DEALING, TRADE USAGE, TRADE PRACTICE, OR INDUSTRY STANDARDS.

NVIDIA CORPORATION
2701 SAN TOMAS EXPRESSWAY
SANTA CLARA, CA 95050, USA

NV_PN	600-1G180-0002-300		
PCB REV	PG180-A02	PAGE	22 OF 54
BOM REV	B	DATE	21-JUN-2018

PAGE 23: NVHS Interface

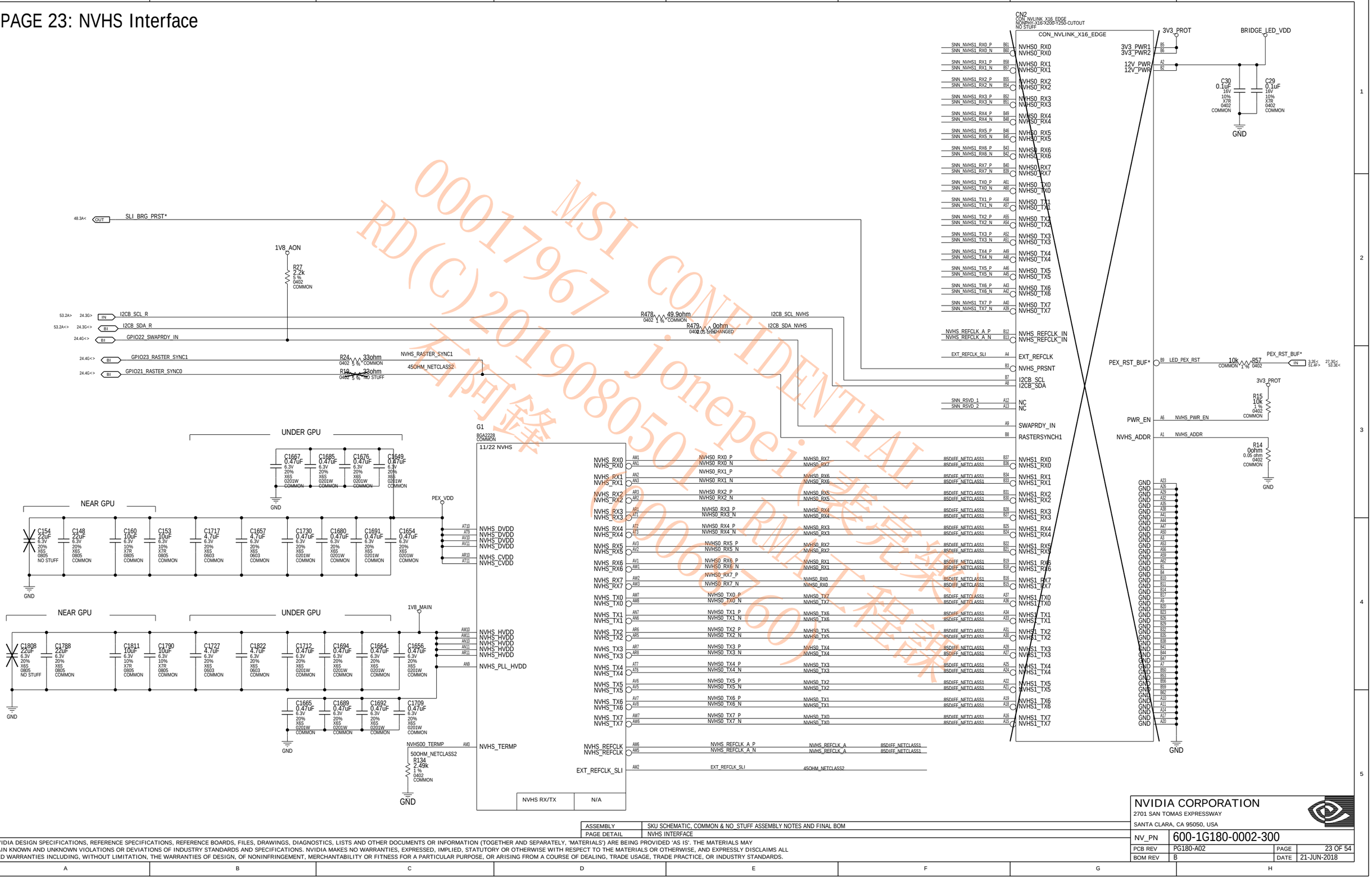

MSI CONFIDENTIAL
0001796 7
RD(C)20190805 Jonepei
石阿锋

ASSEMBLY	SKU SCHEMATIC, COMMON & NO_STUFF ASSEMBLY NOTES AND FINAL BOM
PAGE DETAIL	NVHS INTERFACE

ALL NVIDIA DESIGN SPECIFICATIONS, REFERENCE SPECIFICATIONS, REFERENCE BOARDS, FILES, DRAWINGS, DIAGNOSTICS, LISTS AND OTHER DOCUMENTS OR INFORMATION (TOGETHER AND SEPARATELY, 'MATERIALS') ARE BEING PROVIDED 'AS IS'. THE MATERIALS MAY CONTAIN KNOWN AND UNKNOWN VIOLATIONS OR DEVIATIONS OF INDUSTRY STANDARDS AND SPECIFICATIONS. NVIDIA MAKES NO WARRANTIES, EXPRESSED, IMPLIED, STATUTORY OR OTHERWISE WITH RESPECT TO THE MATERIALS OR OTHERWISE, AND EXPRESSLY DISCLAIMS ALL IMPLIED WARRANTIES INCLUDING, WITHOUT LIMITATION, THE WARRANTIES OF DESIGN, OF NONINFRINGEMENT, MERCHANTABILITY OR FITNESS FOR A PARTICULAR PURPOSE, OR ARISING FROM A COURSE OF DEALING, TRADE USAGE, TRADE PRACTICE, OR INDUSTRY STANDARDS.

NVIDIA CORPORATION
2701 SAN TOMAS EXPRESSWAY
SANTA CLARA, CA 95050, USA

NV_PN	600-1G180-0002-300		
PCB REV	PG180-A02	PAGE	23 OF 54
BOM REV	B	DATE	21-JUN-2018

PAGE 24: MISC: Fan, Thermal, JTAG, GPIO, STEREO

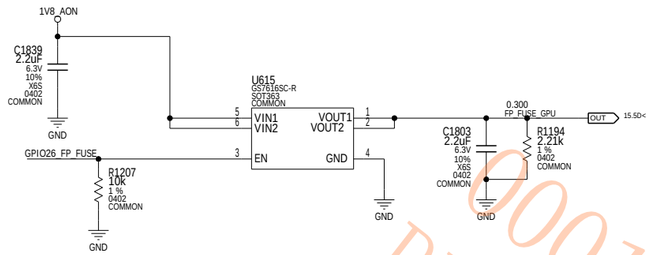

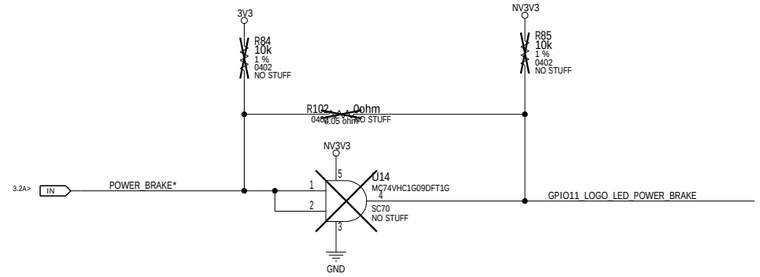

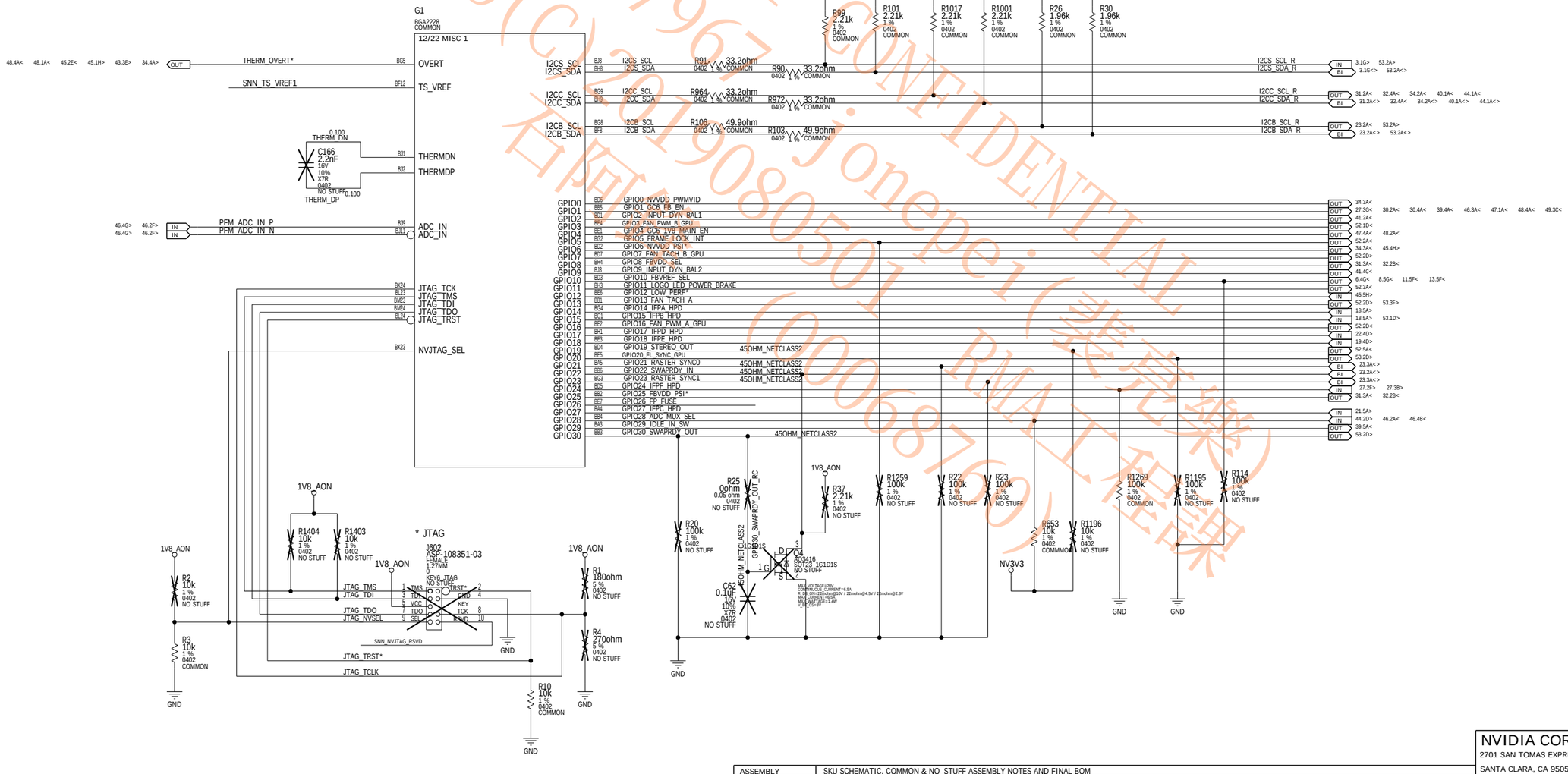

ASSEMBLY	SKU SCHEMATIC, COMMON & NO_STUFF ASSEMBLY NOTES AND FINAL BOM
PAGE DETAIL	MISC: FAN,THERMAL,JTAG,GPIO,STEREO

ALL NVIDIA DESIGN SPECIFICATIONS, REFERENCE SPECIFICATIONS, REFERENCE BOARDS, FILES, DRAWINGS, DIAGNOSTICS, LISTS AND OTHER DOCUMENTS OR INFORMATION (TOGETHER AND SEPARATELY, 'MATERIALS') ARE BEING PROVIDED 'AS IS'. THE MATERIALS MAY CONTAIN KNOWN AND UNKNOWN VIOLATIONS OR DEVIATIONS OF INDUSTRY STANDARDS AND SPECIFICATIONS. NVIDIA MAKES NO WARRANTIES, EXPRESSED, IMPLIED, STATUTORY OR OTHERWISE WITH RESPECT TO THE MATERIALS OR OTHERWISE, AND EXPRESSLY DISCLAIMS ALL IMPLIED WARRANTIES INCLUDING, WITHOUT LIMITATION, THE WARRANTIES OF DESIGN, OF NONINFRINGEMENT, MERCHANTABILITY OR FITNESS FOR A PARTICULAR PURPOSE, OR ARISING FROM A COURSE OF DEALING, TRADE USAGE, TRADE PRACTICE, OR INDUSTRY STANDARDS.

NVIDIA CORPORATION
2701 SAN TOMAS EXPRESSWAY
SANTA CLARA, CA 95050, USA

NV_PN	600-1G180-0002-300		
PCB REV	PG180-A02	PAGE	24 OF 54
BOM REV	B	DATE	21-JUN-2018

MSI CONFIDENTIAL
RD(C)2019080501 RMA工程課
0001796 Jonepei(廖元培)

PAGE 25: MISC: ROM, Straps

H=High :Tied to 1.8V
M=Middle:Tied to 0.9V
L=Low :Tied to 0V

STRAP2	STRAP1	STRAP0	RAMCFG[4:0]		
L	L	L	00000	RAMCFG TBD	
L	L	H	00001	RAMCFG TBD	DEFAULT
L	H	L	00010	RAMCFG TBD	
L	H	H	00011	RAMCFG TBD	
H	H	L	00110	RAMCFG TBD	
H	H	H	00111	RAMCFG TBD	

RAMCFG[4:0]	DENSITY	WIDTH	VENDOR
00000	8Gb	256-bit	Samsung
00001	8Gb	256-bit	Micron
00010	8Gb	256-bit	Hynix
00110	16Gb	256-bit	Hynix
00111	16Gb	256-bit	Samsung
01000	16Gb	256-bit	Micron

ROM_SO	ROM_SI	ROM_SCLK	DUMMY[2:0],FS_OVERT	1:ENABLE 0:DISABLE	
L	L	L	XXX1	FS_OVERT ENABLE	DEFAULT
L	L	M	XXX0	FS_OVERT DISABLE	

STRAP5	STRAP4	STRAP3	SMB_ALT_ADDR	DEVID_SEL	PCIE_CFG	VGA_DEVICE
M	H	H	1	1	1	1
M	H	L	1	1	1	0
M	L	H	1	1	0	1
M	L	L	1	1	0	0
L	H	M	1	0	1	1
L	M	H	1	0	1	0
L	M	L	1	0	0	1
L	L	M	1	0	0	0
H	H	H	0	1	1	1
H	H	L	0	1	1	0
H	L	H	0	1	0	1
H	L	L	0	1	0	0
L	H	H	0	0	1	1
L	H	L	0	0	1	0
L	L	H	0	0	0	1
L	L	L	0	0	0	0

1:SMB_ALT_ADDR ENABLE
0:SMB_ALT_ADDR DISABLE

1:DEVID_SEL REBRAND
0:DEVID_SEL ORIGNAL

1:PCIE_CFG LOW POWER
0:PCIE_CFG HIGH POWER

1:VGA_DEVICE ENABLE
0:VGA_DEVICE DISABLE

Default

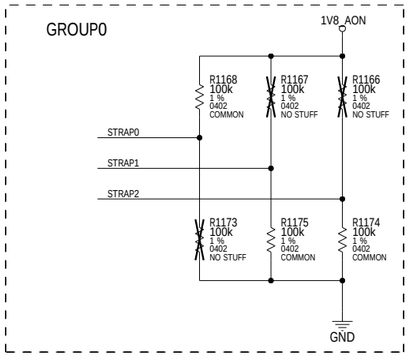

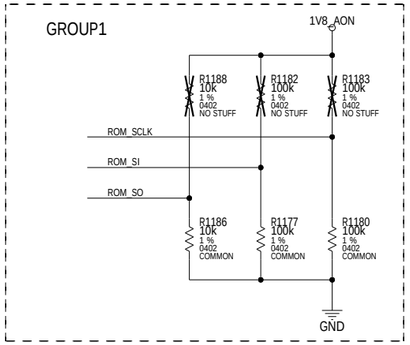

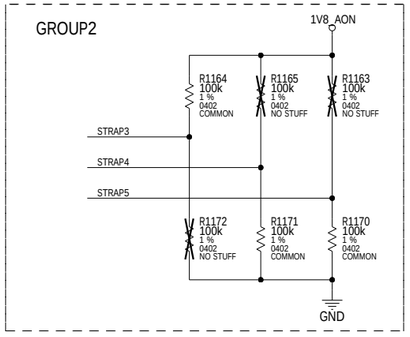

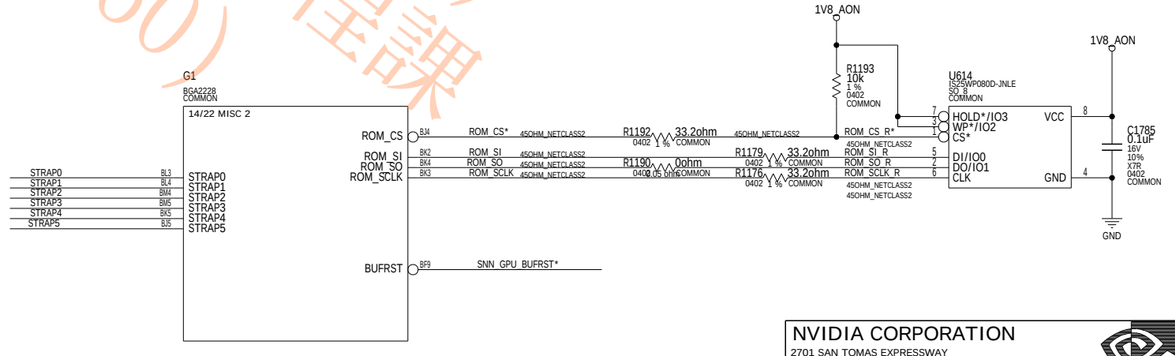

MSI CONFIDENTIAL
C00017967 jonepei(裴亮樂)
RD(C)20190805 RMA工程課
台阿鋒 (06)0069760

ASSEMBLY	SKU SCHEMATIC, COMMON & NO_STUFF ASSEMBLY NOTES AND FINAL BOM
PAGE DETAIL	MISC3: ROM, STRAPS

ALL NVIDIA DESIGN SPECIFICATIONS, REFERENCE SPECIFICATIONS, REFERENCE BOARDS, FILES, DRAWINGS, DIAGNOSTICS, LISTS AND OTHER DOCUMENTS OR INFORMATION (TOGETHER AND SEPARATELY, 'MATERIALS') ARE BEING PROVIDED 'AS IS'. THE MATERIALS MAY CONTAIN KNOWN AND UNKNOWN VIOLATIONS OR DEVIATIONS OF INDUSTRY STANDARDS AND SPECIFICATIONS. NVIDIA MAKES NO WARRANTIES, EXPRESSED, IMPLIED, STATUTORY OR OTHERWISE WITH RESPECT TO THE MATERIALS OR OTHERWISE, AND EXPRESSLY DISCLAIMS ALL IMPLIED WARRANTIES INCLUDING, WITHOUT LIMITATION, THE WARRANTIES OF DESIGN, OF NONINFRINGEMENT, MERCHANTABILITY OR FITNESS FOR A PARTICULAR PURPOSE, OR ARISING FROM A COURSE OF DEALING, TRADE USAGE, TRADE PRACTICE, OR INDUSTRY STANDARDS.

NVIDIA CORPORATION
2701 SAN TOMAS EXPRESSWAY
SANTA CLARA, CA 95050, USA

NV_PN	600-1G180-0002-300		
PCB REV	PG180-A02	PAGE	25 OF 54
BOM REV	B	DATE	21-JUN-2018

PAGE 26: MISC: XTAL. PLL

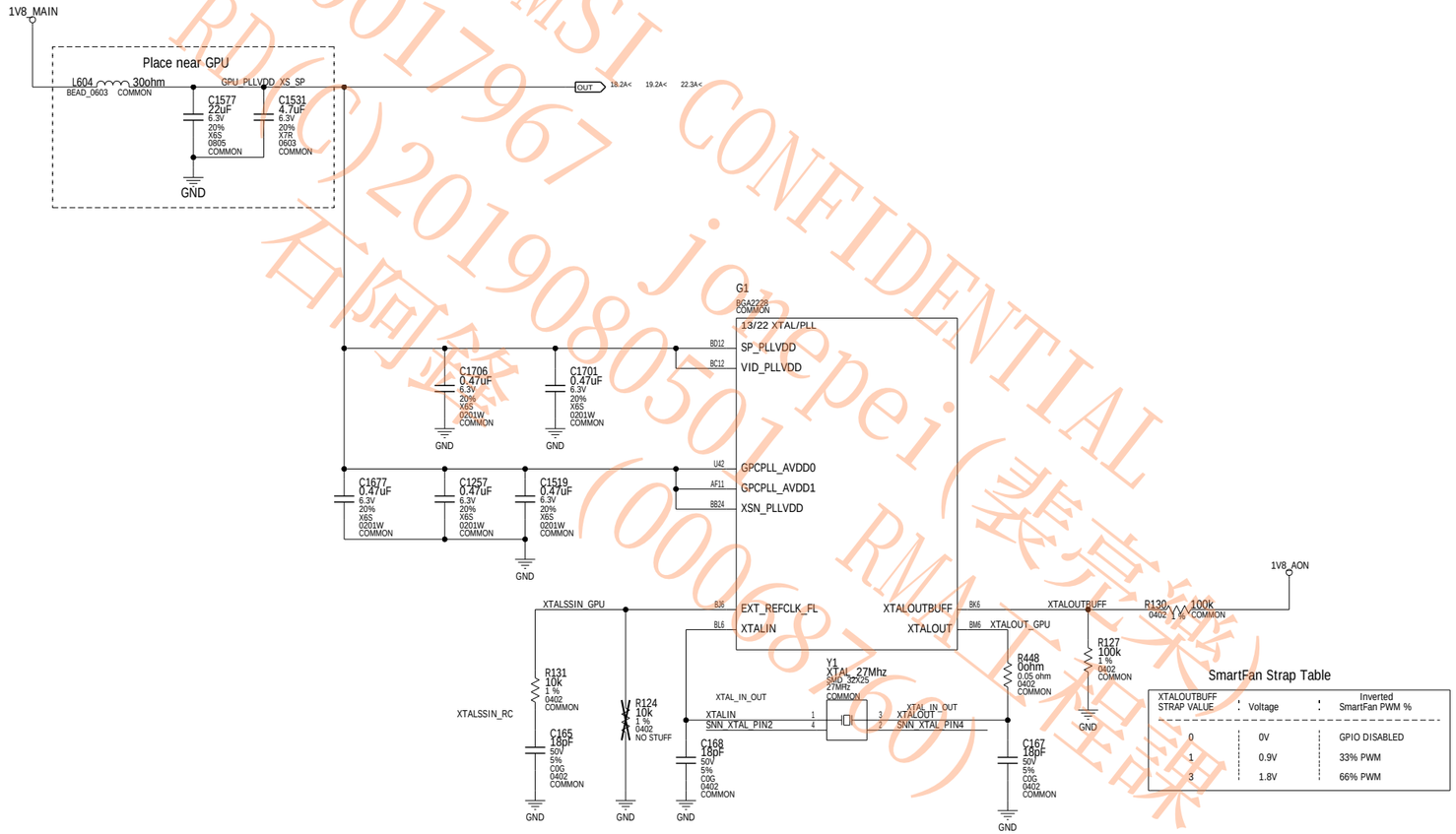

SmartFan Strap Table

XTALOUTBUFF STRAP VALUE	Voltage	Inverted SmartFan PWM %
0	0V	GPIO DISABLED
1	0.9V	33% PWM
3	1.8V	66% PWM

MSI CONFIDENTIAL
00017967 joepei(裴亮樂)
RD(C)2019080501 RMM(王祖謀)
石阿鑾 (00068760)

ASSEMBLY	SKU SCHEMATIC, COMMON & NO_STUFF ASSEMBLY NOTES AND FINAL BOM
PAGE DETAIL	MISC: XTAL, PLL

ALL NVIDIA DESIGN SPECIFICATIONS, REFERENCE SPECIFICATIONS, REFERENCE BOARDS, FILES, DRAWINGS, DIAGNOSTICS, LISTS AND OTHER DOCUMENTS OR INFORMATION (TOGETHER AND SEPARATELY, 'MATERIALS') ARE BEING PROVIDED 'AS IS'. THE MATERIALS MAY CONTAIN KNOWN AND UNKNOWN VIOLATIONS OR DEVIATIONS OF INDUSTRY STANDARDS AND SPECIFICATIONS. NVIDIA MAKES NO WARRANTIES, EXPRESSED, IMPLIED, STATUTORY OR OTHERWISE WITH RESPECT TO THE MATERIALS OR OTHERWISE, AND EXPRESSLY DISCLAIMS ALL IMPLIED WARRANTIES INCLUDING, WITHOUT LIMITATION, THE WARRANTIES OF DESIGN, OF NONINFRINGEMENT, MERCHANTABILITY OR FITNESS FOR A PARTICULAR PURPOSE, OR ARISING FROM A COURSE OF DEALING, TRADE USAGE, TRADE PRACTICE, OR INDUSTRY STANDARDS.

NVIDIA CORPORATION
2701 SAN TOMAS EXPRESSWAY
SANTA CLARA, CA 95050, USA

NV_PN	600-1G180-0002-300		
PCB REV	PG180-A02	PAGE	26 OF 54
BOM REV	B	DATE	21-JUN-2018

PAGE 27: MISC: USB PPC

PIN	ANX	CYP
1	TP	TP
2	RESET	VBUS_MON
3	NC	NC
4	ROLE_SEL (PD)	CC2
5	NC	VCON_5V
6	VDDD (3.3V)	CC1
7	VBUS_MON	RESET
8	NC	NC
9	CC2	I2CM_SDA
10	VCON_5V	I2CM_SCL
11	CC1	HPD
12	VDDD (3.3V)	NC
13	DVDD_IO (1.8V)	NC
14	VBUS_FET_EN	VBUS_FET_EN
15	DSCH_CTL	DSCH_CTL
16	HPD	I2CS_SDA
17	I2CM_SDA	I2CS_SCL
18	I2CM_SCL	NC
19	DVDD_IO (1.8V)	GND
20	NC	VDDD (3.3V)
21	I2CS_SDA	DVDD_IO (1.8V)
22	I2CS_SCL	VCCD (100nF)
23	SINK_CLT (PD)	NC
24	PWR_EN	PWR_EN

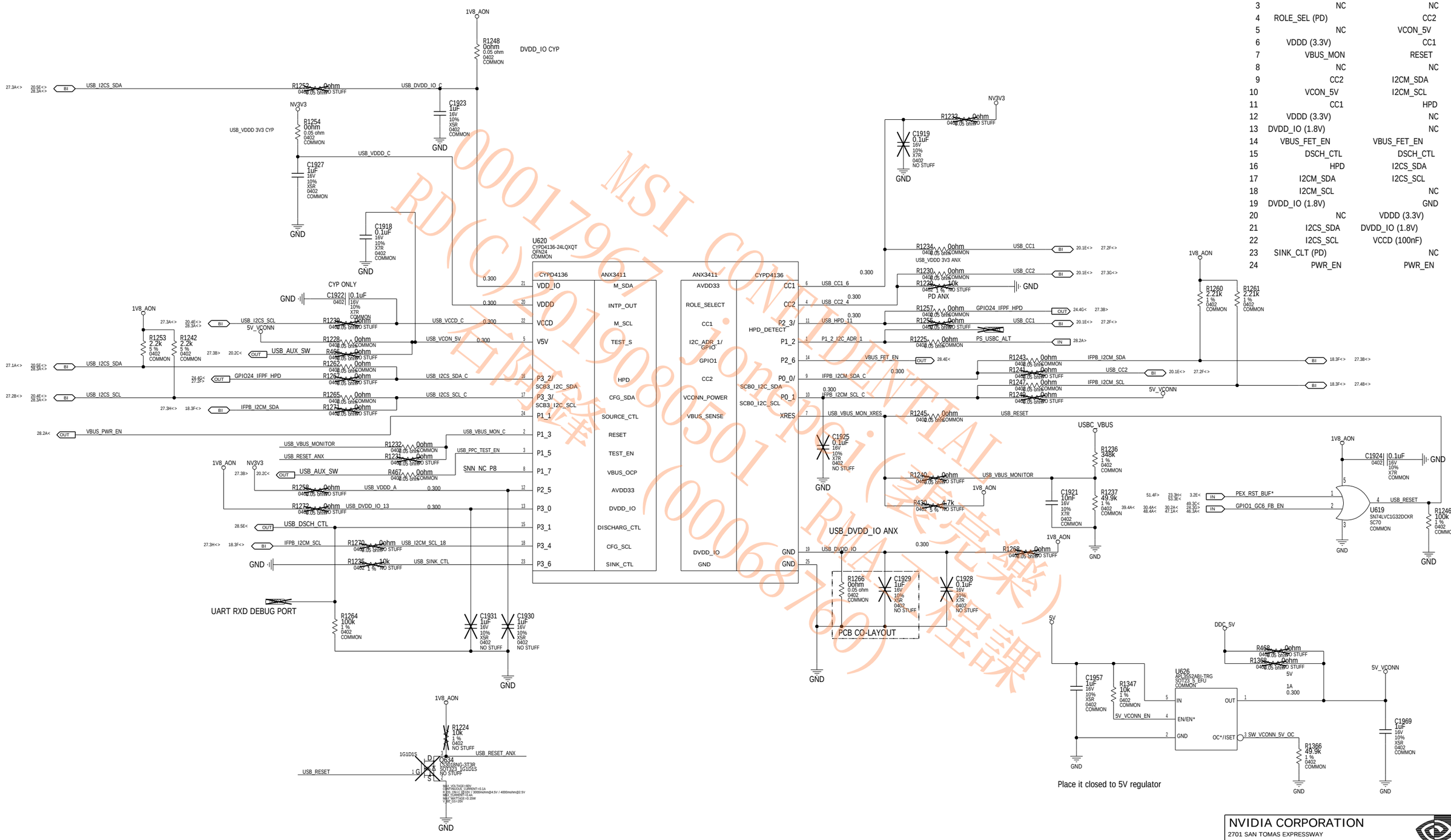

ALL NVIDIA DESIGN SPECIFICATIONS, REFERENCE SPECIFICATIONS, REFERENCE BOARDS, FILES, DRAWINGS, DIAGNOSTICS, LISTS AND OTHER DOCUMENTS OR INFORMATION (TOGETHER AND SEPARATELY, 'MATERIALS') ARE BEING PROVIDED 'AS IS'. THE MATERIALS MAY CONTAIN KNOWN AND UNKNOWN VIOLATIONS OR DEVIATIONS OF INDUSTRY STANDARDS AND SPECIFICATIONS. NVIDIA MAKES NO WARRANTIES, EXPRESSED, IMPLIED, STATUTORY OR OTHERWISE WITH RESPECT TO THE MATERIALS OR OTHERWISE, AND EXPRESSLY DISCLAIMS ALL IMPLIED WARRANTIES INCLUDING, WITHOUT LIMITATION, THE WARRANTIES OF DESIGN, OF NONINFRINGEMENT, MERCHANTABILITY OR FITNESS FOR A PARTICULAR PURPOSE, OR ARISING FROM A COURSE OF DEALING, TRADE USAGE, TRADE PRACTICE, OR INDUSTRY STANDARDS.

ASSEMBLY	SKU SCHEMATIC, COMMON & NO_STUFF ASSEMBLY NOTES AND FINAL BOM
PAGE DETAIL	MISC: USB PPC

NVIDIA CORPORATION
2701 SAN TOMAS EXPRESSWAY
SANTA CLARA, CA 95050, USA

NV_PN	600-1G180-0002-300		
PCB REV	PG180-A02	PAGE	27 OF 54
BOM REV	B	DATE	21-JUN-2018

MSI CONFIDENTIAL
RD(C)20190805

PAGE 28: PS: USB VR

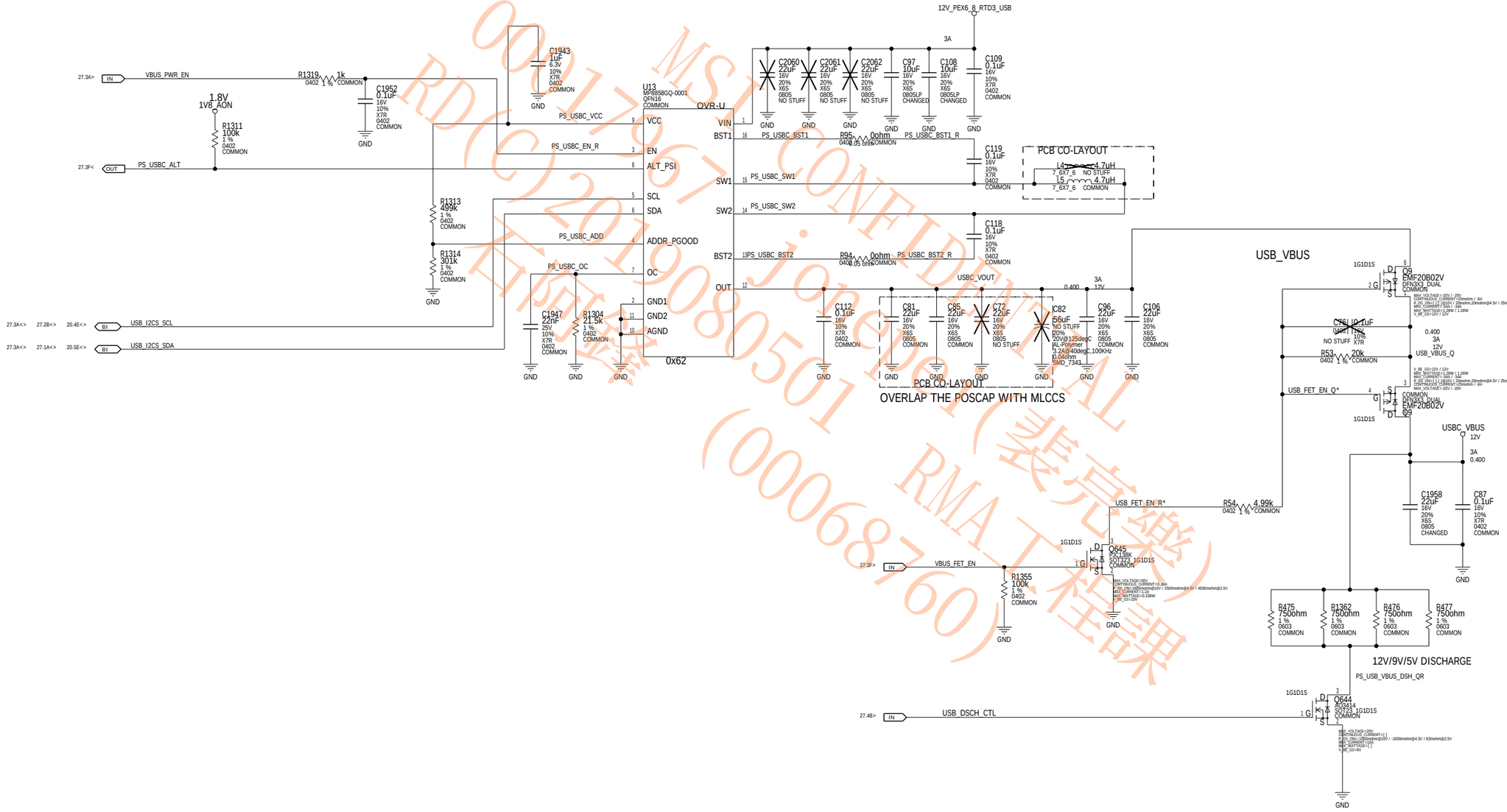

ASSEMBLY	SKU SCHEMATIC, COMMON & NO_STUFF ASSEMBLY NOTES AND FINAL BOM
PAGE DETAIL	PS: USB VR

ALL NVIDIA DESIGN SPECIFICATIONS, REFERENCE SPECIFICATIONS, REFERENCE BOARDS, FILES, DRAWINGS, DIAGNOSTICS, LISTS AND OTHER DOCUMENTS OR INFORMATION (TOGETHER AND SEPARATELY, 'MATERIALS') ARE BEING PROVIDED 'AS IS'. THE MATERIALS MAY CONTAIN KNOWN AND UNKNOWN VIOLATIONS OR DEVIATIONS OF INDUSTRY STANDARDS AND SPECIFICATIONS. NVIDIA MAKES NO WARRANTIES, EXPRESSED, IMPLIED, STATUTORY OR OTHERWISE WITH RESPECT TO THE MATERIALS OR OTHERWISE, AND EXPRESSLY DISCLAIMS ALL IMPLIED WARRANTIES INCLUDING, WITHOUT LIMITATION, THE WARRANTIES OF DESIGN, OF NONINFRINGEMENT, MERCHANTABILITY OR FITNESS FOR A PARTICULAR PURPOSE, OR ARISING FROM A COURSE OF DEALING, TRADE USAGE, TRADE PRACTICE, OR INDUSTRY STANDARDS.

NVIDIA CORPORATION
2701 SAN TOMAS EXPRESSWAY
SANTA CLARA, CA 95050, USA

NV_PN	600-1G180-0002-300		
PCB REV	PG180-A02	PAGE	28 OF 54
BOM REV	B	DATE	21-JUN-2018

PAGE 29: PS: 5V, 5V_BACKUP

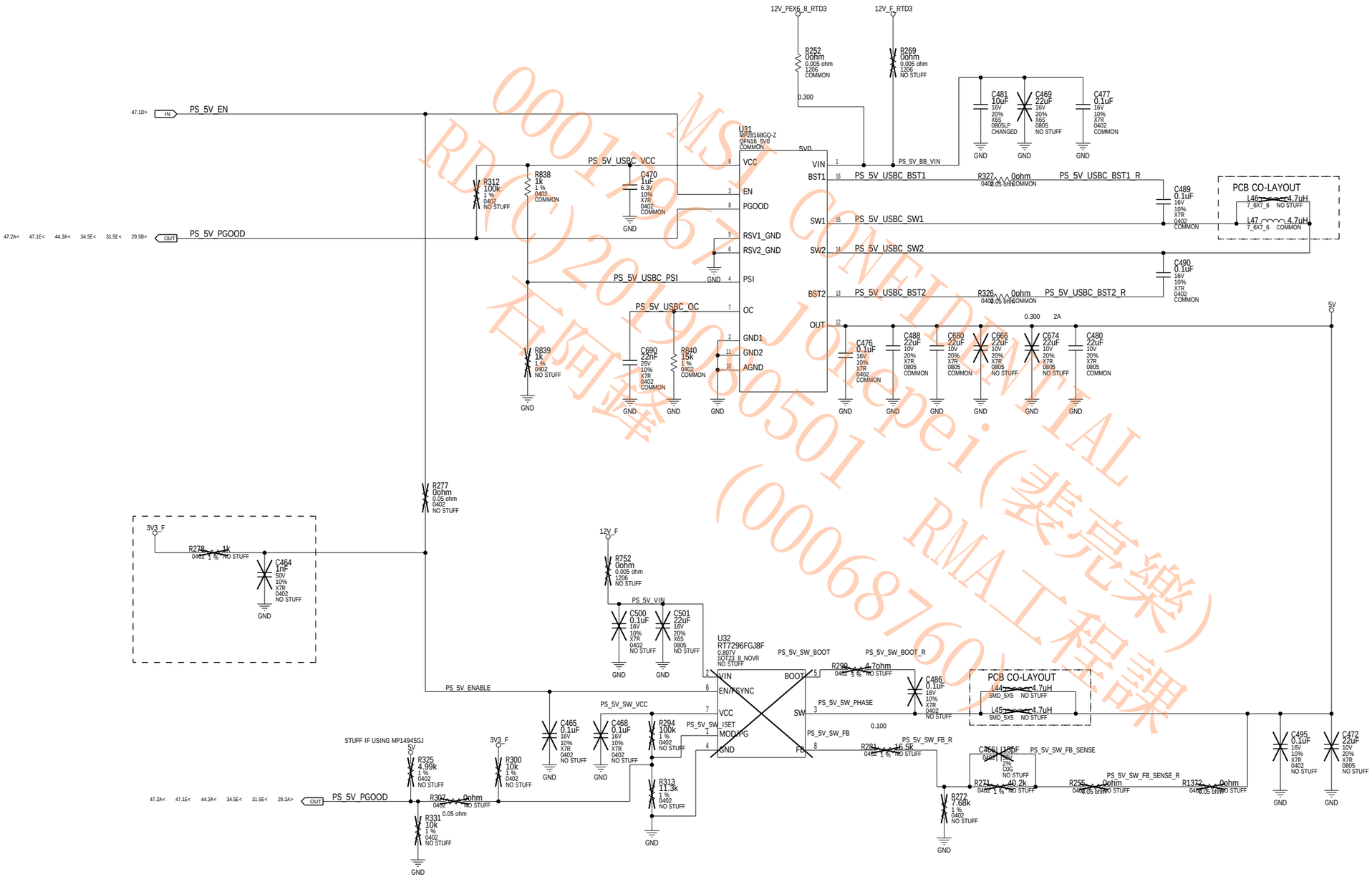

MSI CONFIDENTIAL
Joe Pei(裴亮樂)
RMA工程課
(0006876)
RD(C)2019050

ASSEMBLY	SKU SCHEMATIC, COMMON & NO_STUFF ASSEMBLY NOTES AND FINAL BOM
PAGE DETAIL	PS: 5V, 5V BACKUP

ALL NVIDIA DESIGN SPECIFICATIONS, REFERENCE SPECIFICATIONS, REFERENCE BOARDS, FILES, DRAWINGS, DIAGNOSTICS, LISTS AND OTHER DOCUMENTS OR INFORMATION (TOGETHER AND SEPARATELY, 'MATERIALS') ARE BEING PROVIDED 'AS IS'. THE MATERIALS MAY CONTAIN KNOWN AND UNKNOWN VIOLATIONS OR DEVIATIONS OF INDUSTRY STANDARDS AND SPECIFICATIONS. NVIDIA MAKES NO WARRANTIES, EXPRESSED, IMPLIED, STATUTORY OR OTHERWISE WITH RESPECT TO THE MATERIALS OR OTHERWISE, AND EXPRESSLY DISCLAIMS ALL IMPLIED WARRANTIES INCLUDING, WITHOUT LIMITATION, THE WARRANTIES OF DESIGN, OF NONINFRINGEMENT, MERCHANTABILITY OR FITNESS FOR A PARTICULAR PURPOSE, OR ARISING FROM A COURSE OF DEALING, TRADE USAGE, TRADE PRACTICE, OR INDUSTRY STANDARDS.

NVIDIA CORPORATION
2701 SAN TOMAS EXPRESSWAY
SANTA CLARA, CA 95050, USA

NV_PN	600-1G180-0002-300		
PCB REV	PG180-A02	PAGE	29 OF 54
BOM REV	B	DATE	21-JUN-2018

PAGE 30: PS: PEXVDD, 1V8

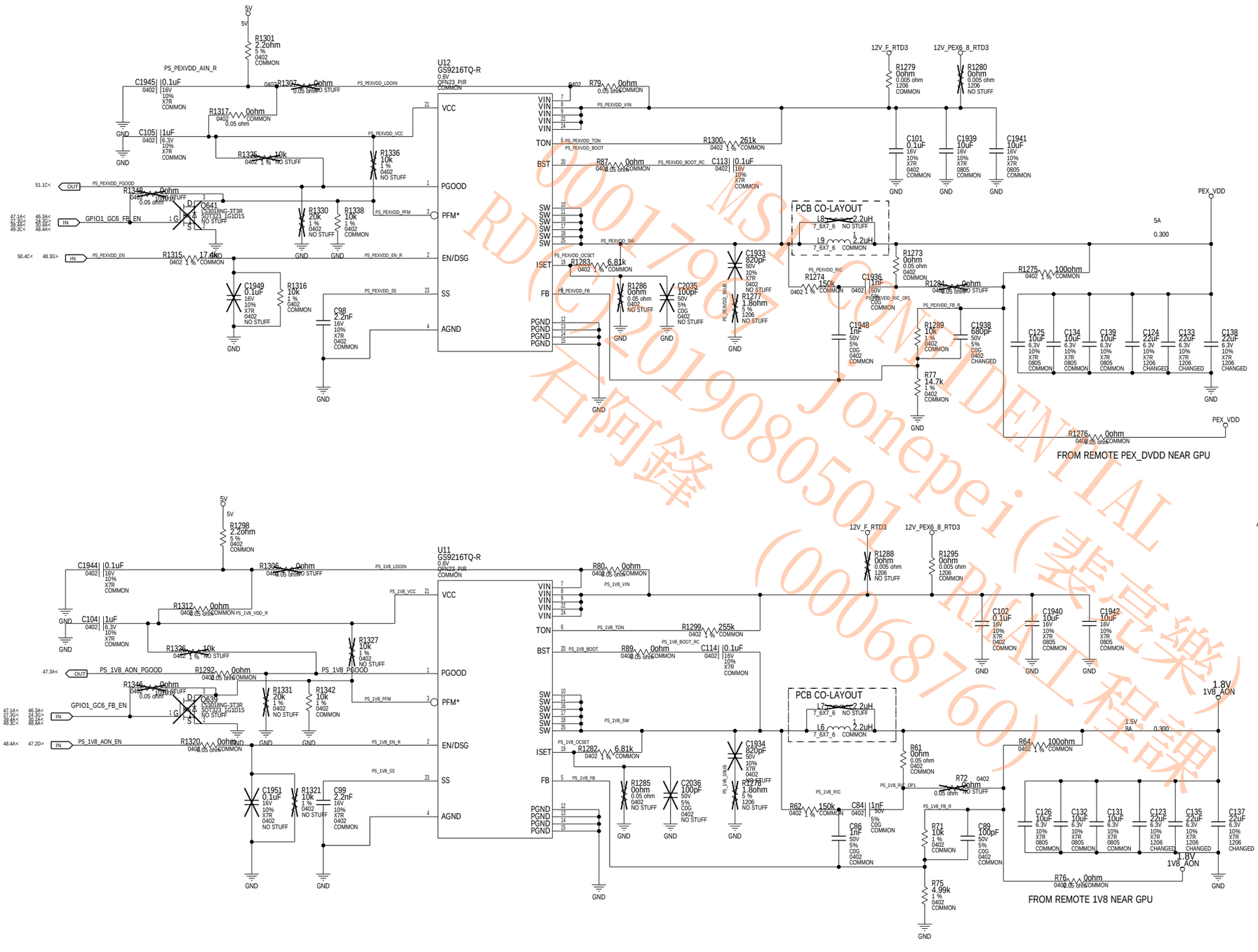

ASSEMBLY	SKU SCHEMATIC, COMMON & NO_STUFF ASSEMBLY NOTES AND FINAL BOM
PAGE DETAIL	PS: PEXVDD, 1V8

ALL NVIDIA DESIGN SPECIFICATIONS, REFERENCE SPECIFICATIONS, REFERENCE BOARDS, FILES, DRAWINGS, DIAGNOSTICS, LISTS AND OTHER DOCUMENTS OR INFORMATION (TOGETHER AND SEPARATELY, 'MATERIALS') ARE BEING PROVIDED 'AS IS'. THE MATERIALS MAY CONTAIN KNOWN AND UNKNOWN VIOLATIONS OR DEVIATIONS OF INDUSTRY STANDARDS AND SPECIFICATIONS. NVIDIA MAKES NO WARRANTIES, EXPRESSED, IMPLIED, STATUTORY OR OTHERWISE WITH RESPECT TO THE MATERIALS OR OTHERWISE, AND EXPRESSLY DISCLAIMS ALL IMPLIED WARRANTIES INCLUDING, WITHOUT LIMITATION, THE WARRANTIES OF DESIGN, OF NONINFRINGEMENT, MERCHANTABILITY OR FITNESS FOR A PARTICULAR PURPOSE, OR ARISING FROM A COURSE OF DEALING, TRADE USAGE, TRADE PRACTICE, OR INDUSTRY STANDARDS.

NVIDIA CORPORATION
2701 SAN TOMAS EXPRESSWAY
SANTA CLARA, CA 95050, USA

NV_PN	600-1G180-0002-300		
PCB REV	PG180-A02	PAGE	30 OF 54
BOM REV	B	DATE	21-JUN-2018

0001796 MSI CONFIDENTIAL
RD(CD)2019080501 Jonepei(裴宪乐)
(00068760) RD工程师 阿锋

PAGE 31: PS: FBVDD Controller

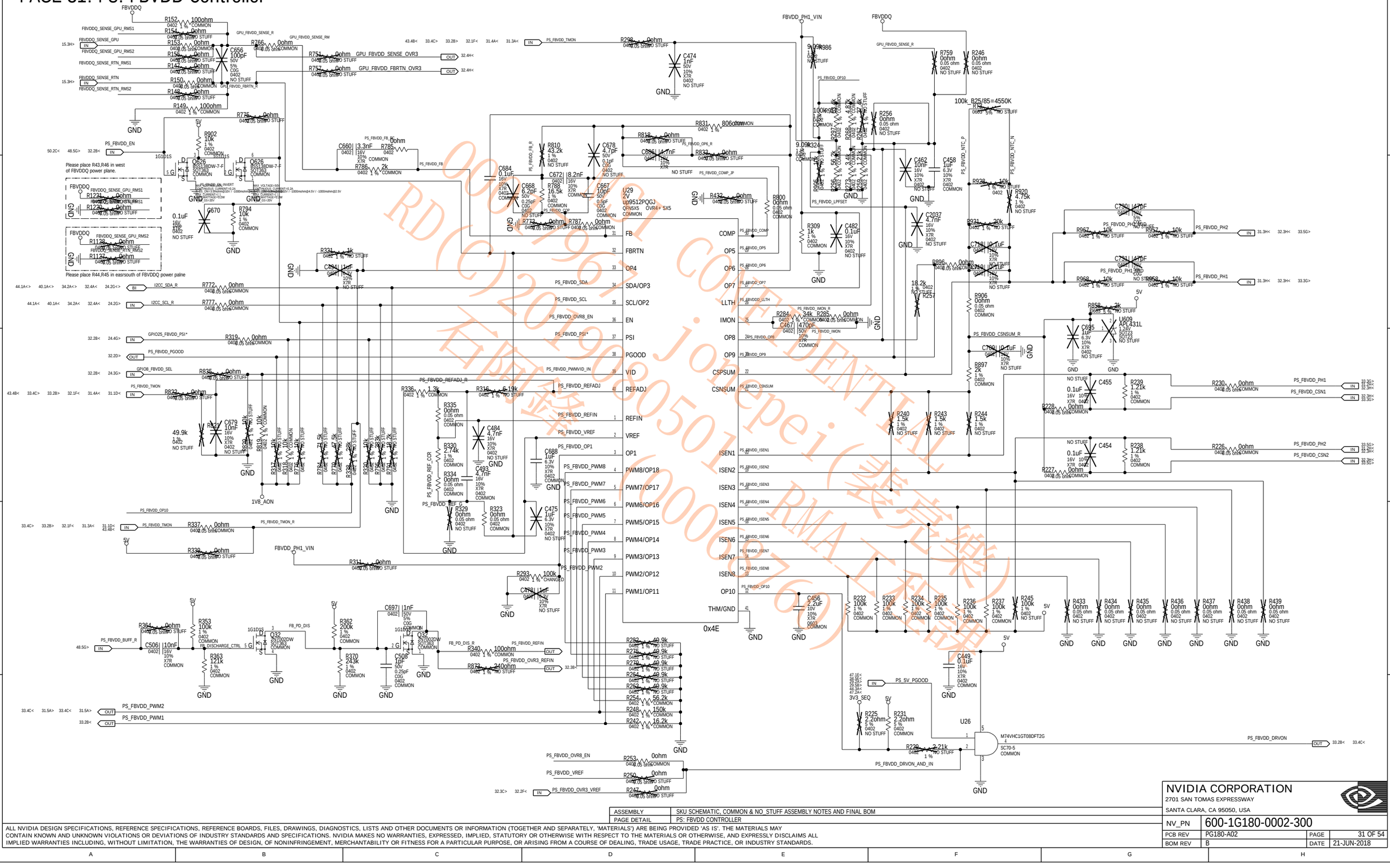

0081961 CONFIDENTIAL
RD(C)2019080501 joepei(裴宪章)
石墨科技(600076) RMA工程用

ASSEMBLY	SKU SCHEMATIC, COMMON & NO_STUFF ASSEMBLY NOTES AND FINAL BOM
PAGE DETAIL	PS: FBVDD CONTROLLER

ALL NVIDIA DESIGN SPECIFICATIONS, REFERENCE SPECIFICATIONS, REFERENCE BOARDS, FILES, DRAWINGS, DIAGNOSTICS, LISTS AND OTHER DOCUMENTS OR INFORMATION (TOGETHER AND SEPARATELY, 'MATERIALS') ARE BEING PROVIDED 'AS IS'. THE MATERIALS MAY CONTAIN KNOWN AND UNKNOWN VIOLATIONS OR DEVIATIONS OF INDUSTRY STANDARDS AND SPECIFICATIONS. NVIDIA MAKES NO WARRANTIES, EXPRESSED, IMPLIED, STATUTORY OR OTHERWISE WITH RESPECT TO THE MATERIALS OR OTHERWISE, AND EXPRESSLY DISCLAIMS ALL IMPLIED WARRANTIES INCLUDING, WITHOUT LIMITATION, THE WARRANTIES OF DESIGN, OF NONINFRINGEMENT, MERCHANTABILITY OR FITNESS FOR A PARTICULAR PURPOSE, OR ARISING FROM A COURSE OF DEALING, TRADE USAGE, TRADE PRACTICE, OR INDUSTRY STANDARDS.

NVIDIA CORPORATION
2701 SAN TOMAS EXPRESSWAY
SANTA CLARA, CA 95050, USA

NV_PN	600-1G180-0002-300		
PCB REV	PG180-A02	PAGE	31 OF 54
BOM REV	B	DATE	21-JUN-2018

PAGE 32: PS: FBVDD Controller OVR3

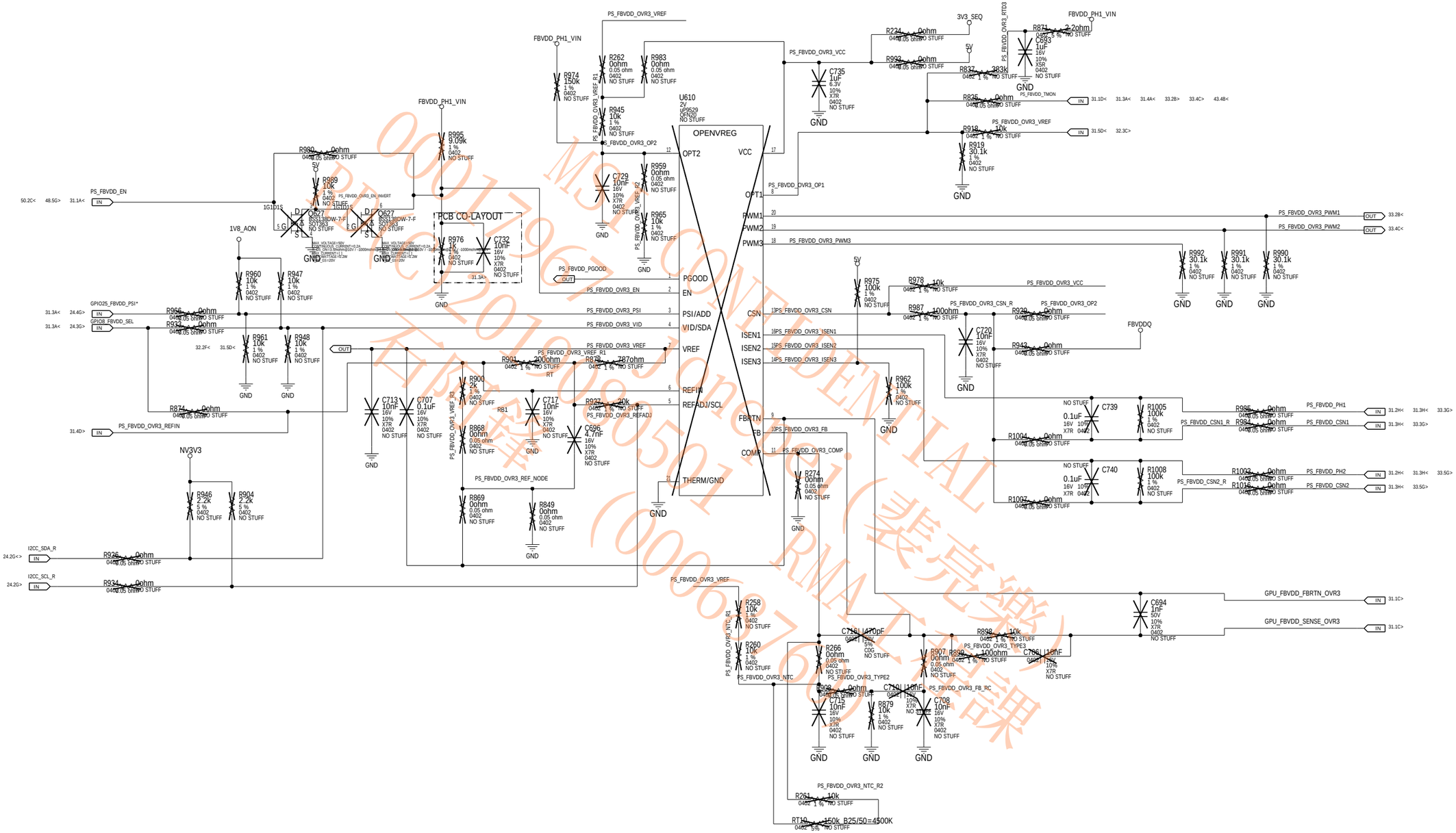

0001796 MSI CONFIDENTIAL
Rec'd 2019/06/05 10:50:11
(000676) RMA下線課
(裝完繳)

ASSEMBLY	SKU SCHEMATIC, COMMON & NO_STUFF ASSEMBLY NOTES AND FINAL BOM
PAGE DETAIL	PS: FBVDD CONTROLLER OVR3

ALL NVIDIA DESIGN SPECIFICATIONS, REFERENCE SPECIFICATIONS, REFERENCE BOARDS, FILES, DRAWINGS, DIAGNOSTICS, LISTS AND OTHER DOCUMENTS OR INFORMATION (TOGETHER AND SEPARATELY, 'MATERIALS') ARE BEING PROVIDED 'AS IS'. THE MATERIALS MAY CONTAIN KNOWN AND UNKNOWN VIOLATIONS OR DEVIATIONS OF INDUSTRY STANDARDS AND SPECIFICATIONS. NVIDIA MAKES NO WARRANTIES, EXPRESSED, IMPLIED, STATUTORY OR OTHERWISE WITH RESPECT TO THE MATERIALS OR OTHERWISE, AND EXPRESSLY DISCLAIMS ALL IMPLIED WARRANTIES INCLUDING, WITHOUT LIMITATION, THE WARRANTIES OF DESIGN, OF NONINFRINGEMENT, MERCHANTABILITY OR FITNESS FOR A PARTICULAR PURPOSE, OR ARISING FROM A COURSE OF DEALING, TRADE USAGE, TRADE PRACTICE, OR INDUSTRY STANDARDS.

NVIDIA CORPORATION
2701 SAN TOMAS EXPRESSWAY
SANTA CLARA, CA 95050, USA

NV_PN	600-1G180-0002-300		
PCB REV	PG180-A02	PAGE	32 OF 54
BOM REV	B	DATE	21-JUN-2018

PAGE 33: PS: FBVDD Phase 1, 2

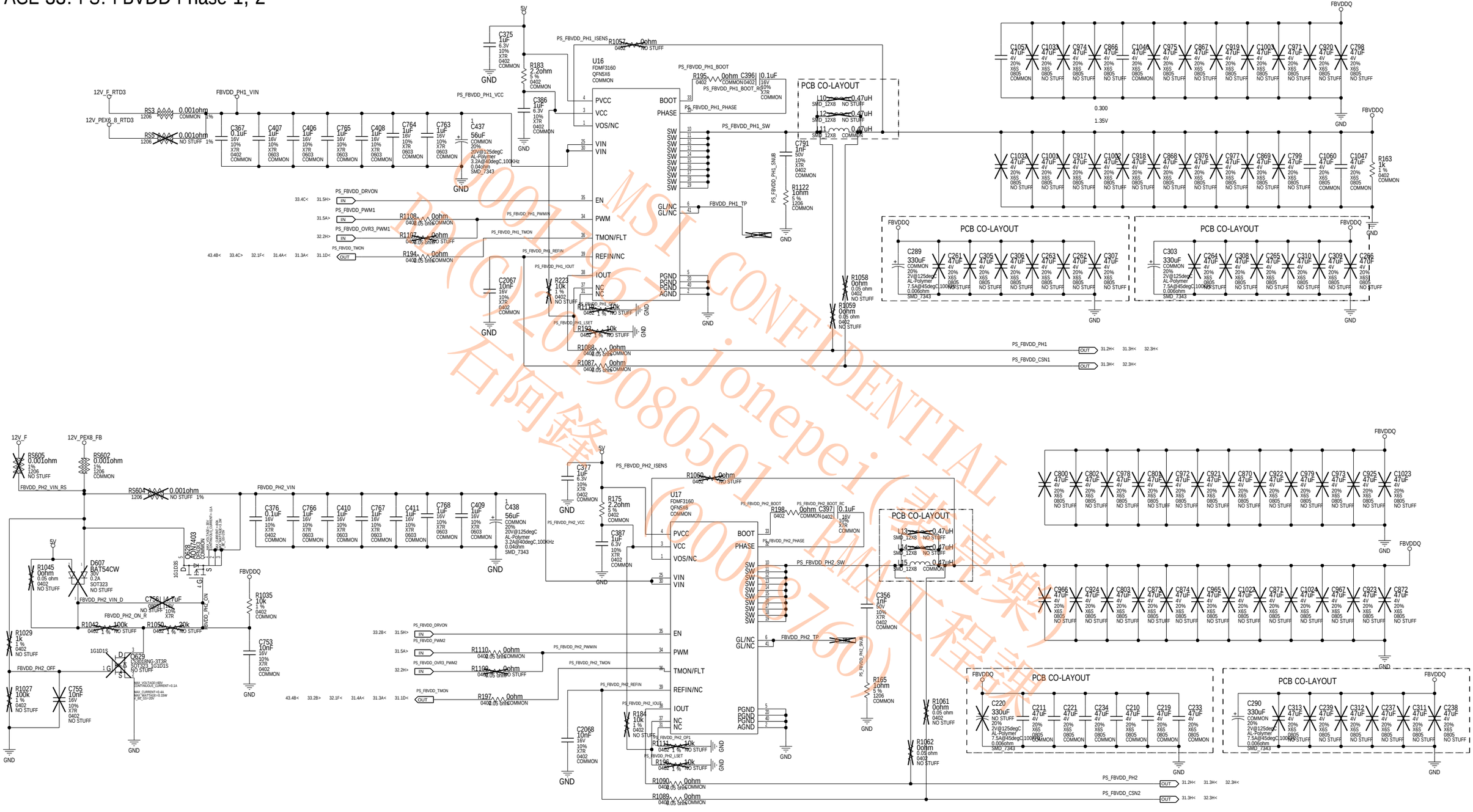

MSI CONFIDENTIAL
P/C/I 2015080501 Jonepei(徐继雷)
0001796 (0000176) BMT工程课
石阿铃

ASSEMBLY	SKU SCHEMATIC, COMMON & NO_STUFF ASSEMBLY NOTES AND FINAL BOM
PAGE DETAIL	PS: FBVDD PHASE 1, 2

ALL NVIDIA DESIGN SPECIFICATIONS, REFERENCE SPECIFICATIONS, REFERENCE BOARDS, FILES, DRAWINGS, DIAGNOSTICS, LISTS AND OTHER DOCUMENTS OR INFORMATION (TOGETHER AND SEPARATELY, 'MATERIALS') ARE BEING PROVIDED 'AS IS'. THE MATERIALS MAY CONTAIN KNOWN AND UNKNOWN VIOLATIONS OR DEVIATIONS OF INDUSTRY STANDARDS AND SPECIFICATIONS. NVIDIA MAKES NO WARRANTIES, EXPRESSED, IMPLIED, STATUTORY OR OTHERWISE WITH RESPECT TO THE MATERIALS OR OTHERWISE, AND EXPRESSLY DISCLAIMS ALL IMPLIED WARRANTIES INCLUDING, WITHOUT LIMITATION, THE WARRANTIES OF DESIGN, OF NONINFRINGEMENT, MERCHANTABILITY OR FITNESS FOR A PARTICULAR PURPOSE, OR ARISING FROM A COURSE OF DEALING, TRADE USAGE, TRADE PRACTICE, OR INDUSTRY STANDARDS.

NVIDIA CORPORATION
2701 SAN TOMAS EXPRESSWAY
SANTA CLARA, CA 95050, USA

NV_PN	600-1G180-0002-300		
PCB REV	PG180-A02	PAGE	33 OF 54
BOM REV	B	DATE	21-JUN-2018

PAGE 34: PS: NVVDD Controller OVR8

These MLCCs should be placed close to the total current SUM resistors of each phase.

U606
2V
up9512PQGJ
QFN5X5 OVR4+ 5X5
COMMON

0x4A

J601
878986009
MALE
2.54mm
SMD

U28
APL431L
1.24V
SOT23
SOT23
3

U30
M74VHC1GT08DFF2G
SC70-5
COMMON

MSI CONFIDENTIAL
Quanta 廣達 Jonney
RDC 20190805 RMA工程機
廣達(0663)(0663)

ASSEMBLY	SKU SCHEMATIC, COMMON & NO_STUFF ASSEMBLY NOTES AND FINAL BOM
PAGE DETAIL	PS: NVVDD CONTROLLER OVR8

ALL NVIDIA DESIGN SPECIFICATIONS, REFERENCE SPECIFICATIONS, REFERENCE BOARDS, FILES, DRAWINGS, DIAGNOSTICS, LISTS AND OTHER DOCUMENTS OR INFORMATION (TOGETHER AND SEPARATELY, 'MATERIALS') ARE BEING PROVIDED 'AS IS'. THE MATERIALS MAY CONTAIN KNOWN AND UNKNOWN VIOLATIONS OR DEVIATIONS OF INDUSTRY STANDARDS AND SPECIFICATIONS. NVIDIA MAKES NO WARRANTIES, EXPRESSED, IMPLIED, STATUTORY OR OTHERWISE WITH RESPECT TO THE MATERIALS OR OTHERWISE, AND EXPRESSLY DISCLAIMS ALL IMPLIED WARRANTIES INCLUDING, WITHOUT LIMITATION, THE WARRANTIES OF DESIGN, OF NONINFRINGEMENT, MERCHANTABILITY OR FITNESS FOR A PARTICULAR PURPOSE, OR ARISING FROM A COURSE OF DEALING, TRADE USAGE, TRADE PRACTICE, OR INDUSTRY STANDARDS.

NVIDIA CORPORATION
2701 SAN TOMAS EXPRESSWAY
SANTA CLARA, CA 95050, USA

NV_PN	600-1G180-0002-300		
PCB REV	PG180-A02	PAGE	34 OF 54
BOM REV	B	DATE	21-JUN-2018

PAGE 35: PS: NVVDD Phase 1, 2

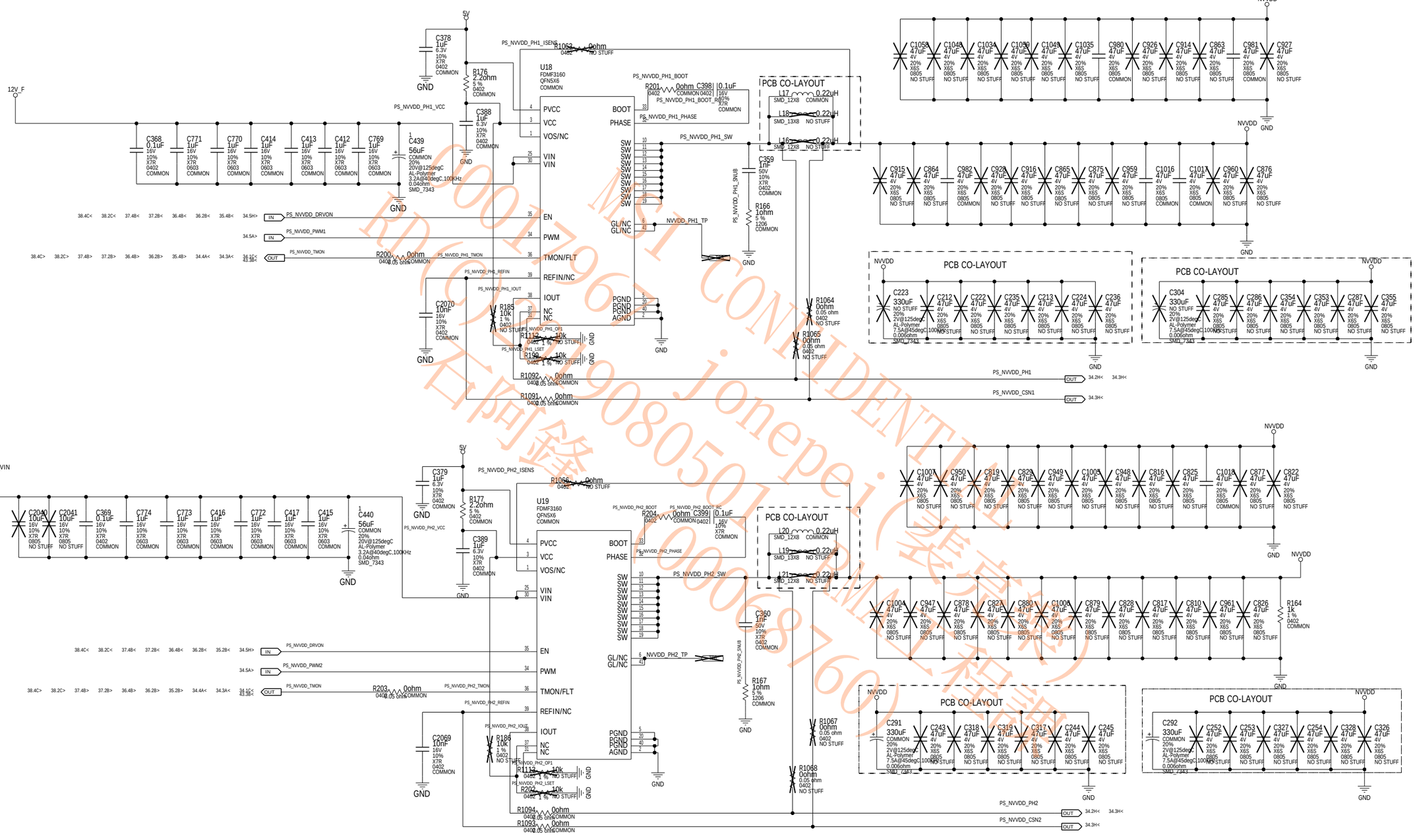

0001796 jonepei 080501 MSI CONFIDENTIAL 13900687609 RD(研发) 仁阿铃

ASSEMBLY	SKU SCHEMATIC, COMMON & NO_STUFF ASSEMBLY NOTES AND FINAL BOM
PAGE DETAIL	PS: NVVDD Phase 1, 2

ALL NVIDIA DESIGN SPECIFICATIONS, REFERENCE SPECIFICATIONS, REFERENCE BOARDS, FILES, DRAWINGS, DIAGNOSTICS, LISTS AND OTHER DOCUMENTS OR INFORMATION (TOGETHER AND SEPARATELY, 'MATERIALS') ARE BEING PROVIDED 'AS IS'. THE MATERIALS MAY CONTAIN KNOWN AND UNKNOWN VIOLATIONS OR DEVIATIONS OF INDUSTRY STANDARDS AND SPECIFICATIONS. NVIDIA MAKES NO WARRANTIES, EXPRESSED, IMPLIED, STATUTORY OR OTHERWISE WITH RESPECT TO THE MATERIALS OR OTHERWISE, AND EXPRESSLY DISCLAIMS ALL IMPLIED WARRANTIES INCLUDING, WITHOUT LIMITATION, THE WARRANTIES OF DESIGN, OF NONINFRINGEMENT, MERCHANTABILITY OR FITNESS FOR A PARTICULAR PURPOSE, OR ARISING FROM A COURSE OF DEALING, TRADE USAGE, TRADE PRACTICE, OR INDUSTRY STANDARDS.

NVIDIA CORPORATION
2701 SAN TOMAS EXPRESSWAY
SANTA CLARA, CA 95050, USA

NV_PN	600-1G180-0002-300		
PCB REV	PG180-A02	PAGE	35 OF 54
BOM REV	B	DATE	21-JUN-2018

PAGE 36: PS: NVVDD Phase 3, 4

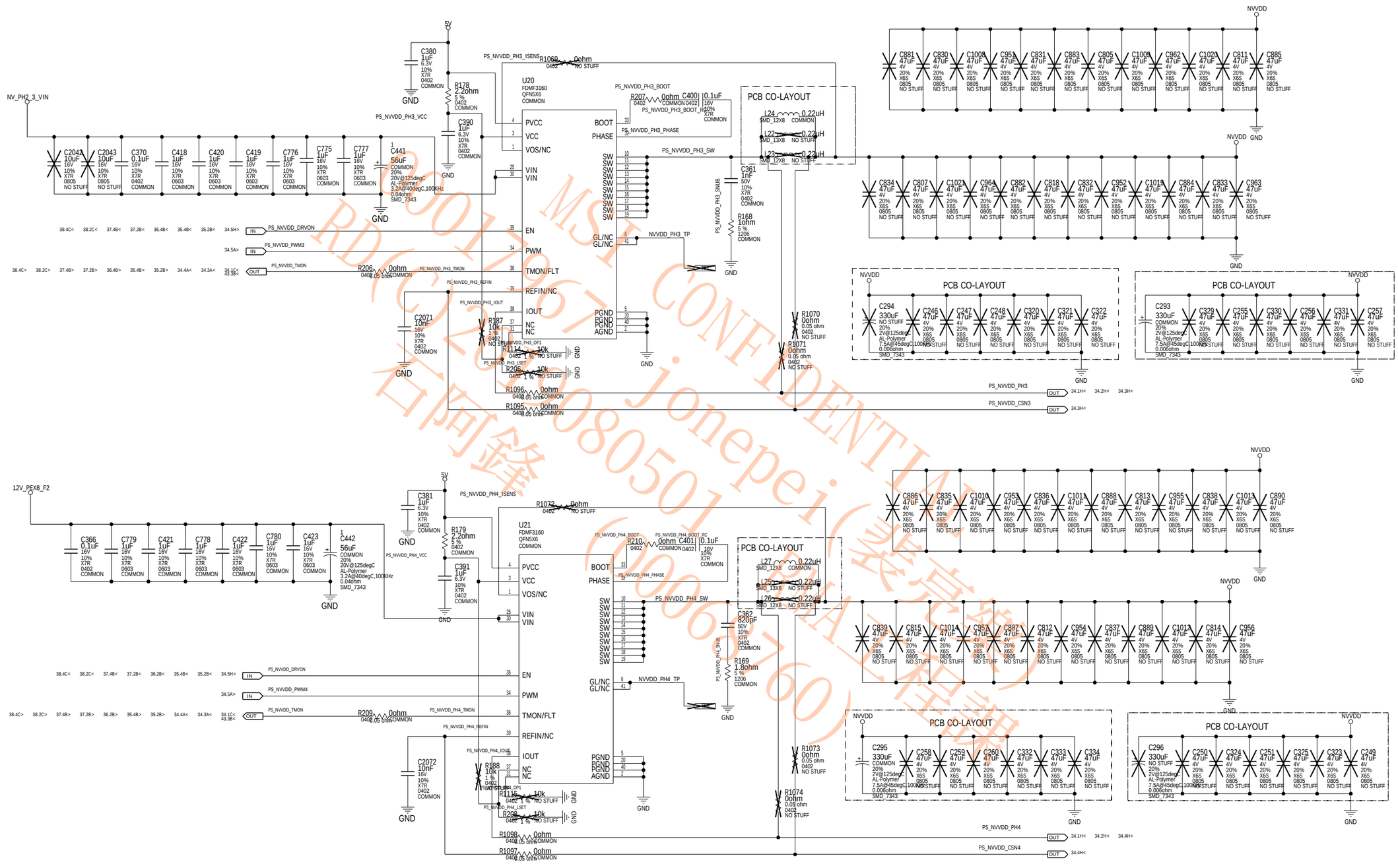

ASSEMBLY	SKU SCHEMATIC, COMMON & NO_STUFF ASSEMBLY NOTES AND FINAL BOM
PAGE DETAIL	PS: NVVDD Phase 3, 4

ALL NVIDIA DESIGN SPECIFICATIONS, REFERENCE SPECIFICATIONS, REFERENCE BOARDS, FILES, DRAWINGS, DIAGNOSTICS, LISTS AND OTHER DOCUMENTS OR INFORMATION (TOGETHER AND SEPARATELY, 'MATERIALS') ARE BEING PROVIDED 'AS IS'. THE MATERIALS MAY CONTAIN KNOWN AND UNKNOWN VIOLATIONS OR DEVIATIONS OF INDUSTRY STANDARDS AND SPECIFICATIONS. NVIDIA MAKES NO WARRANTIES, EXPRESSED, IMPLIED, STATUTORY OR OTHERWISE WITH RESPECT TO THE MATERIALS OR OTHERWISE, AND EXPRESSLY DISCLAIMS ALL IMPLIED WARRANTIES INCLUDING, WITHOUT LIMITATION, THE WARRANTIES OF DESIGN, OF NONINFRINGEMENT, MERCHANTABILITY OR FITNESS FOR A PARTICULAR PURPOSE, OR ARISING FROM A COURSE OF DEALING, TRADE USAGE, TRADE PRACTICE, OR INDUSTRY STANDARDS.

NVIDIA CORPORATION
2701 SAN TOMAS EXPRESSWAY
SANTA CLARA, CA 95050, USA

NV_PN	600-1G180-0002-300		
PCB REV	PG180-A02	PAGE	36 OF 54
BOM REV	B	DATE	21-JUN-2018

PAGE 37: PS: NVVDD Phase 5, 6

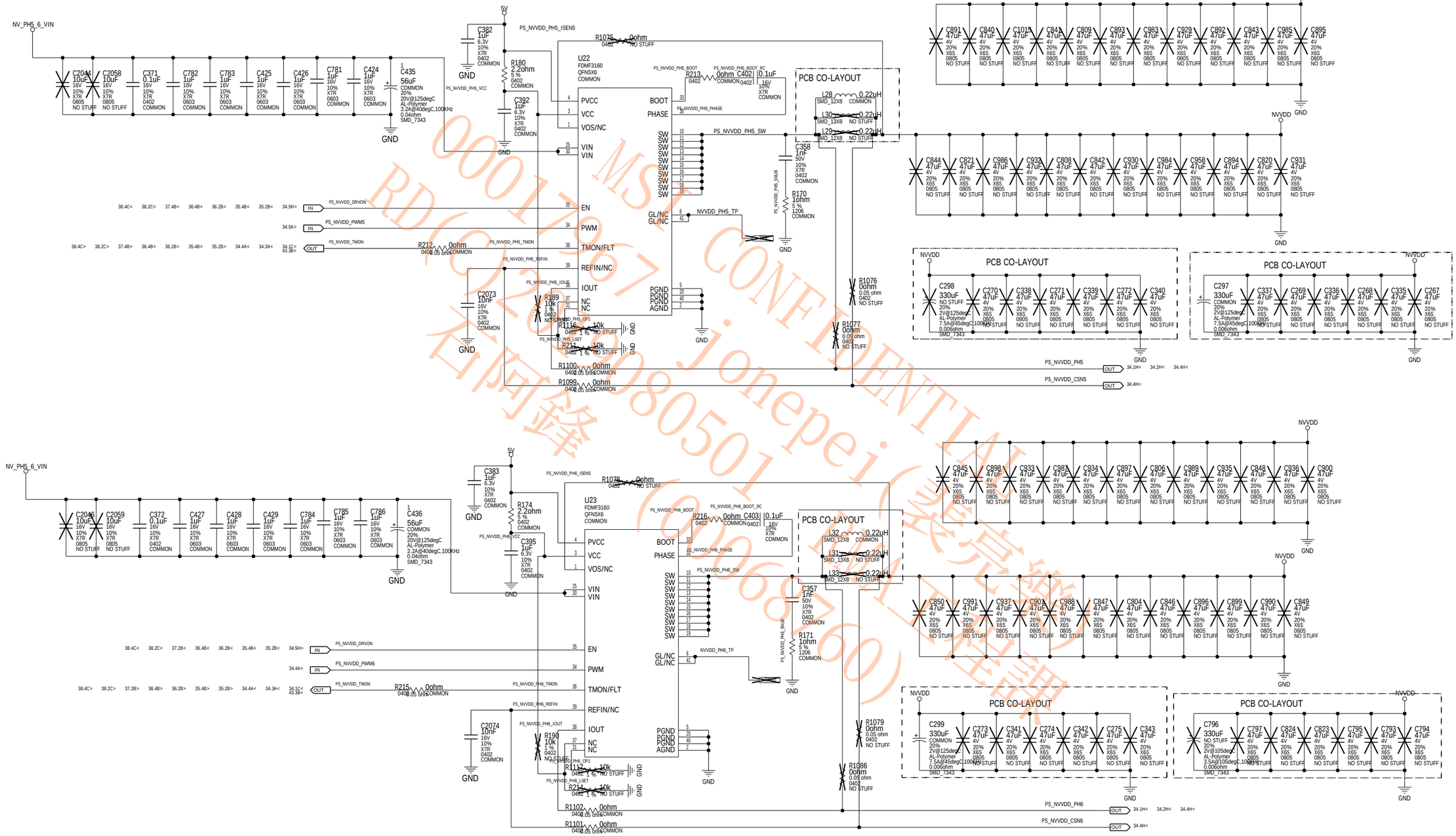

0001 7967 MSI CONFIDENTIAL
RD(C)2020805501 Jonepei(龚荣维)(00968760)
石阿锋(00968760)

ASSEMBLY	SKU SCHEMATIC, COMMON & NO_STUFF ASSEMBLY NOTES AND FINAL BOM
PAGE DETAIL	PS: NVVDD Phase 5, 6

ALL NVIDIA DESIGN SPECIFICATIONS, REFERENCE SPECIFICATIONS, REFERENCE BOARDS, FILES, DRAWINGS, DIAGNOSTICS, LISTS AND OTHER DOCUMENTS OR INFORMATION (TOGETHER AND SEPARATELY, 'MATERIALS') ARE BEING PROVIDED 'AS IS'. THE MATERIALS MAY CONTAIN KNOWN AND UNKNOWN VIOLATIONS OR DEVIATIONS OF INDUSTRY STANDARDS AND SPECIFICATIONS. NVIDIA MAKES NO WARRANTIES, EXPRESSED, IMPLIED, STATUTORY OR OTHERWISE WITH RESPECT TO THE MATERIALS OR OTHERWISE, AND EXPRESSLY DISCLAIMS ALL IMPLIED WARRANTIES INCLUDING, WITHOUT LIMITATION, THE WARRANTIES OF DESIGN, OF NONINFRINGEMENT, MERCHANTABILITY OR FITNESS FOR A PARTICULAR PURPOSE, OR ARISING FROM A COURSE OF DEALING, TRADE USAGE, TRADE PRACTICE, OR INDUSTRY STANDARDS.

NVIDIA CORPORATION
2701 SAN TOMAS EXPRESSWAY
SANTA CLARA, CA 95050, USA

NV_PN	600-1G180-0002-300		
PCB REV	PG180-A02	PAGE	37 OF 54
BOM REV	B	DATE	21-JUN-2018

PAGE 38: PS:NVVDD Phase 7, 8

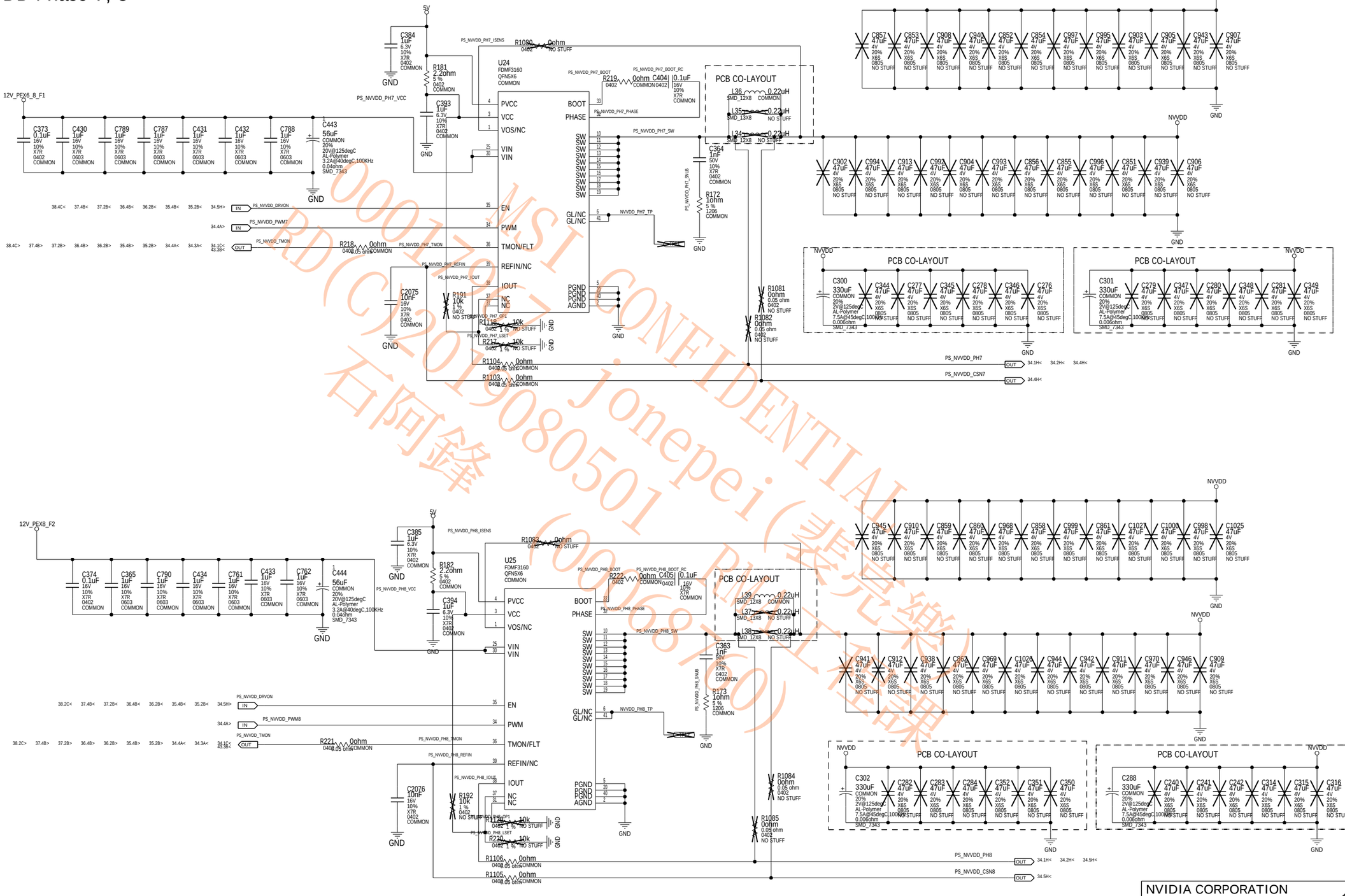

0001702 Jonepei MSI CONFIDENTIAL
RD(C)20190805
石阿锋(请完成)
(0006870)

ASSEMBLY	SKU SCHEMATIC, COMMON & NO_STUFF ASSEMBLY NOTES AND FINAL BOM
PAGE DETAIL	PS: NVVDD Phase 7, 8

ALL NVIDIA DESIGN SPECIFICATIONS, REFERENCE SPECIFICATIONS, REFERENCE BOARDS, FILES, DRAWINGS, DIAGNOSTICS, LISTS AND OTHER DOCUMENTS OR INFORMATION (TOGETHER AND SEPARATELY, 'MATERIALS') ARE BEING PROVIDED 'AS IS'. THE MATERIALS MAY CONTAIN KNOWN AND UNKNOWN VIOLATIONS OR DEVIATIONS OF INDUSTRY STANDARDS AND SPECIFICATIONS. NVIDIA MAKES NO WARRANTIES, EXPRESSED, IMPLIED, STATUTORY OR OTHERWISE WITH RESPECT TO THE MATERIALS OR OTHERWISE, AND EXPRESSLY DISCLAIMS ALL IMPLIED WARRANTIES INCLUDING, WITHOUT LIMITATION, THE WARRANTIES OF DESIGN, OF NONINFRINGEMENT, MERCHANTABILITY OR FITNESS FOR A PARTICULAR PURPOSE, OR ARISING FROM A COURSE OF DEALING, TRADE USAGE, TRADE PRACTICE, OR INDUSTRY STANDARDS.

NVIDIA CORPORATION
2701 SAN TOMAS EXPRESSWAY
SANTA CLARA, CA 95050, USA

NV_PN	600-1G180-0002-300		
PCB REV	PG180-A02	PAGE	38 OF 54
BOM REV	B	DATE	21-JUN-2018

PAGE 39: PS: INPUT SWITCH RTD3

AND GATE LOGIC FOR P-BOARD

GPIO1	GPIO29	SWITCH	VOUT
0	0	0	12V_F
0	1	0	12V_F
1	0	0	12V_F
1	1	1	3V3A

AND GATE LOGIC FOR P-BOARD

GPIO1	GPIO29	SWITCH	VOUT
0	0	0	3V3
0	1	0	3V3
1	0	0	3V3
1	1	1	3V3A

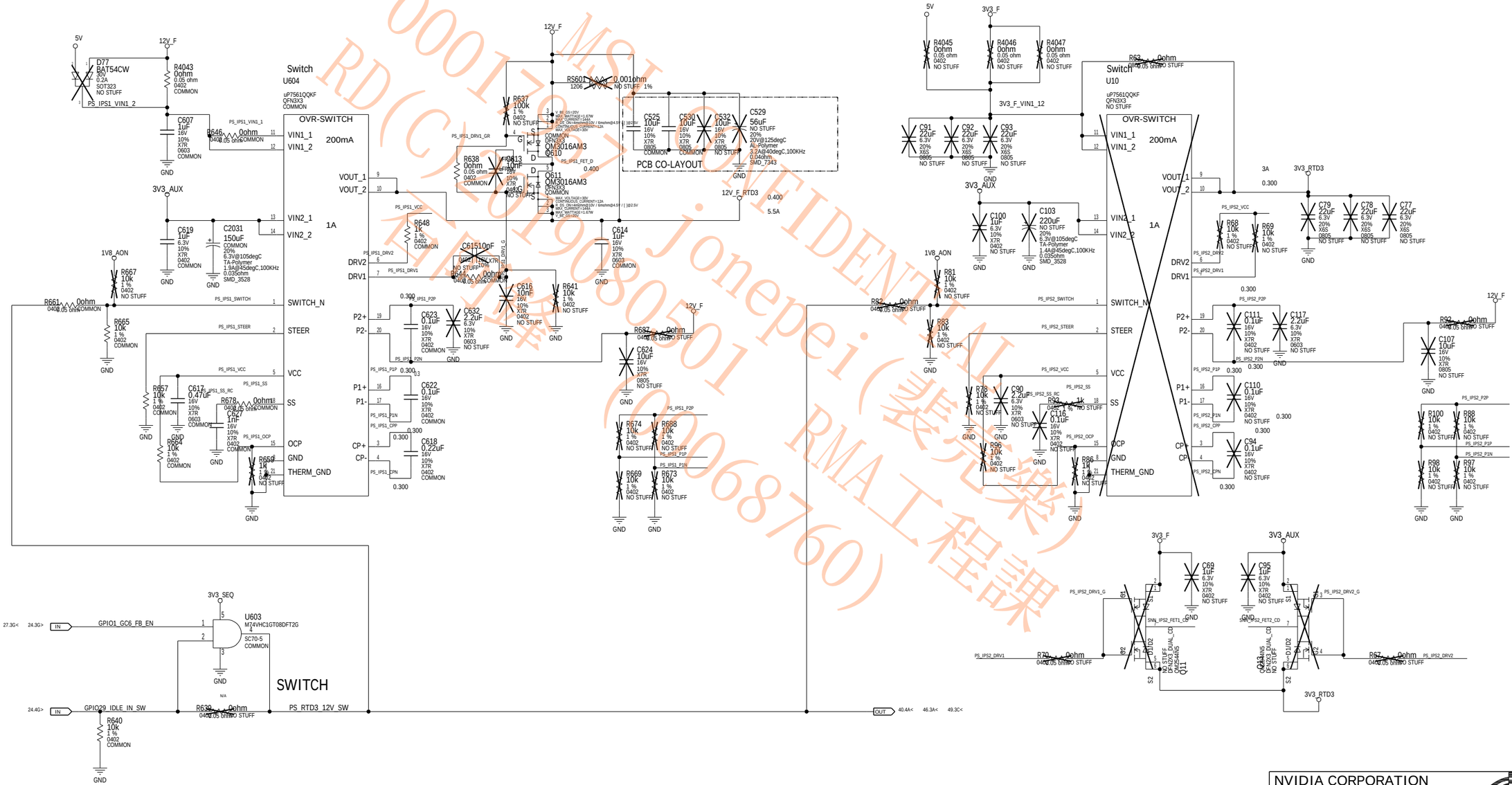

ALL NVIDIA DESIGN SPECIFICATIONS, REFERENCE SPECIFICATIONS, REFERENCE BOARDS, FILES, DRAWINGS, DIAGNOSTICS, LISTS AND OTHER DOCUMENTS OR INFORMATION (TOGETHER AND SEPARATELY, 'MATERIALS') ARE BEING PROVIDED 'AS IS'. THE MATERIALS MAY CONTAIN KNOWN AND UNKNOWN VIOLATIONS OR DEVIATIONS OF INDUSTRY STANDARDS AND SPECIFICATIONS. NVIDIA MAKES NO WARRANTIES, EXPRESSED, IMPLIED, STATUTORY OR OTHERWISE WITH RESPECT TO THE MATERIALS OR OTHERWISE, AND EXPRESSLY DISCLAIMS ALL IMPLIED WARRANTIES INCLUDING, WITHOUT LIMITATION, THE WARRANTIES OF DESIGN, OF NONINFRINGEMENT, MERCHANTABILITY OR FITNESS FOR A PARTICULAR PURPOSE, OR ARISING FROM A COURSE OF DEALING, TRADE USAGE, TRADE PRACTICE, OR INDUSTRY STANDARDS.

ASSEMBLY	SKU SCHEMATIC, COMMON & NO_STUFF ASSEMBLY NOTES AND FINAL BOM
PAGE DETAIL	PS: INPUT SWITCH RTD3

NVIDIA CORPORATION
2701 SAN TOMAS EXPRESSWAY
SANTA CLARA, CA 95050, USA

NV_PN	600-1G180-0002-300		
PCB REV	PG180-A02	PAGE	39 OF 54
BOM REV	B	DATE	21-JUN-2018

PAGE 40: PS: INPUT SWITCH RTD3 USB

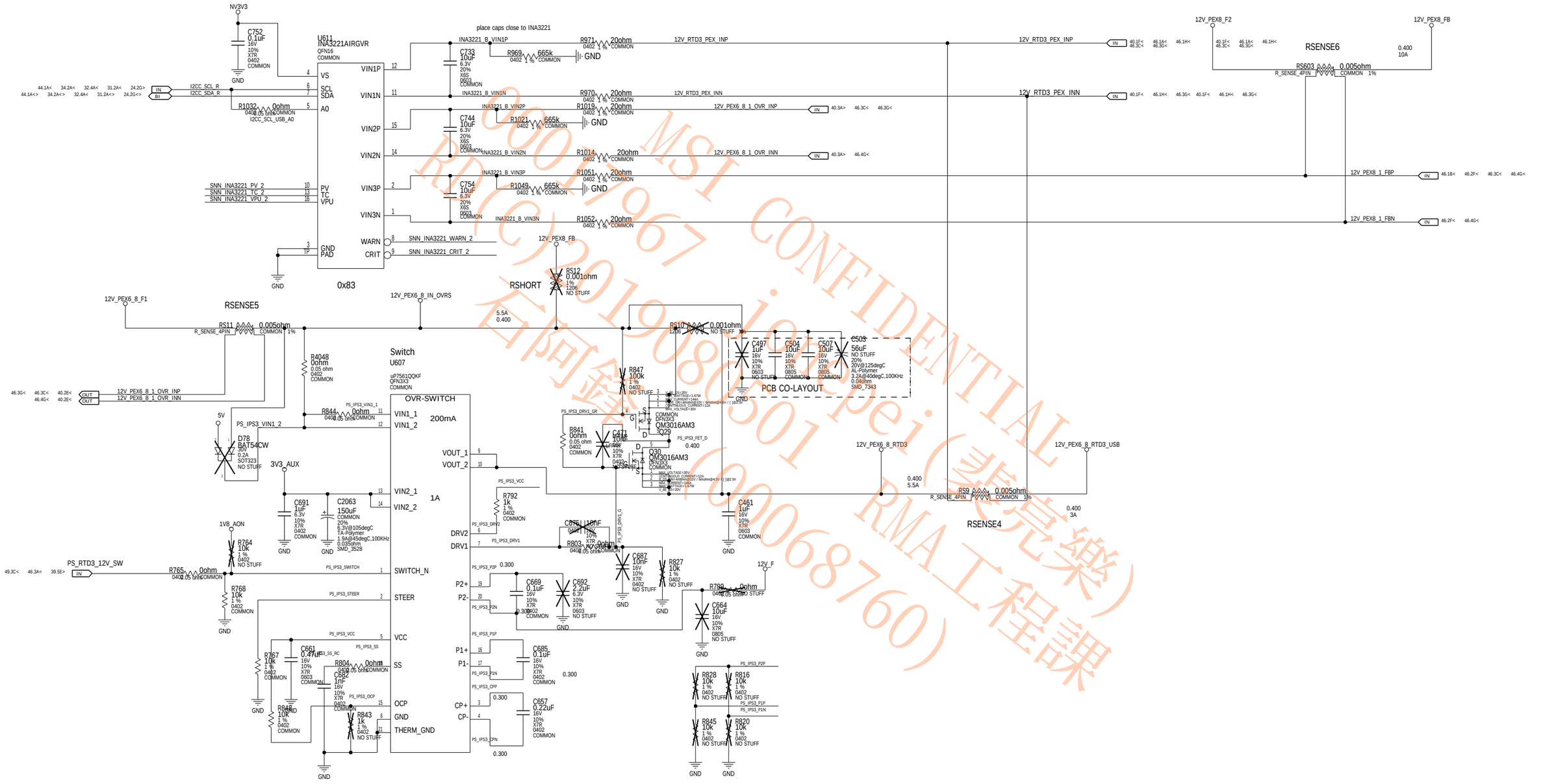

00017967 MSI CONFIDENTIAL
RD(C)2019080501 ioPei(裴完樂)
台阿錢(600068760) RMA工程課

ASSEMBLY	SKU SCHEMATIC, COMMON & NO_STUFF ASSEMBLY NOTES AND FINAL BOM
PAGE DETAIL	PS: INPUT SWITCH RTD3 USB

ALL NVIDIA DESIGN SPECIFICATIONS, REFERENCE SPECIFICATIONS, REFERENCE BOARDS, FILES, DRAWINGS, DIAGNOSTICS, LISTS AND OTHER DOCUMENTS OR INFORMATION (TOGETHER AND SEPARATELY, 'MATERIALS') ARE BEING PROVIDED 'AS IS'. THE MATERIALS MAY CONTAIN KNOWN AND UNKNOWN VIOLATIONS OR DEVIATIONS OF INDUSTRY STANDARDS AND SPECIFICATIONS. NVIDIA MAKES NO WARRANTIES, EXPRESSED, IMPLIED, STATUTORY OR OTHERWISE WITH RESPECT TO THE MATERIALS OR OTHERWISE, AND EXPRESSLY DISCLAIMS ALL IMPLIED WARRANTIES INCLUDING, WITHOUT LIMITATION, THE WARRANTIES OF DESIGN, OF NONINFRINGEMENT, MERCHANTABILITY OR FITNESS FOR A PARTICULAR PURPOSE, OR ARISING FROM A COURSE OF DEALING, TRADE USAGE, TRADE PRACTICE, OR INDUSTRY STANDARDS.

NVIDIA CORPORATION
2701 SAN TOMAS EXPRESSWAY
SANTA CLARA, CA 95050, USA

NV_PN	600-1G180-0002-300		
PCB REV	PG180-A02	PAGE	40 OF 54
BOM REV	B	DATE	21-JUN-2018

PAGE 41: PS: INPUT SWITCH Rail Balance

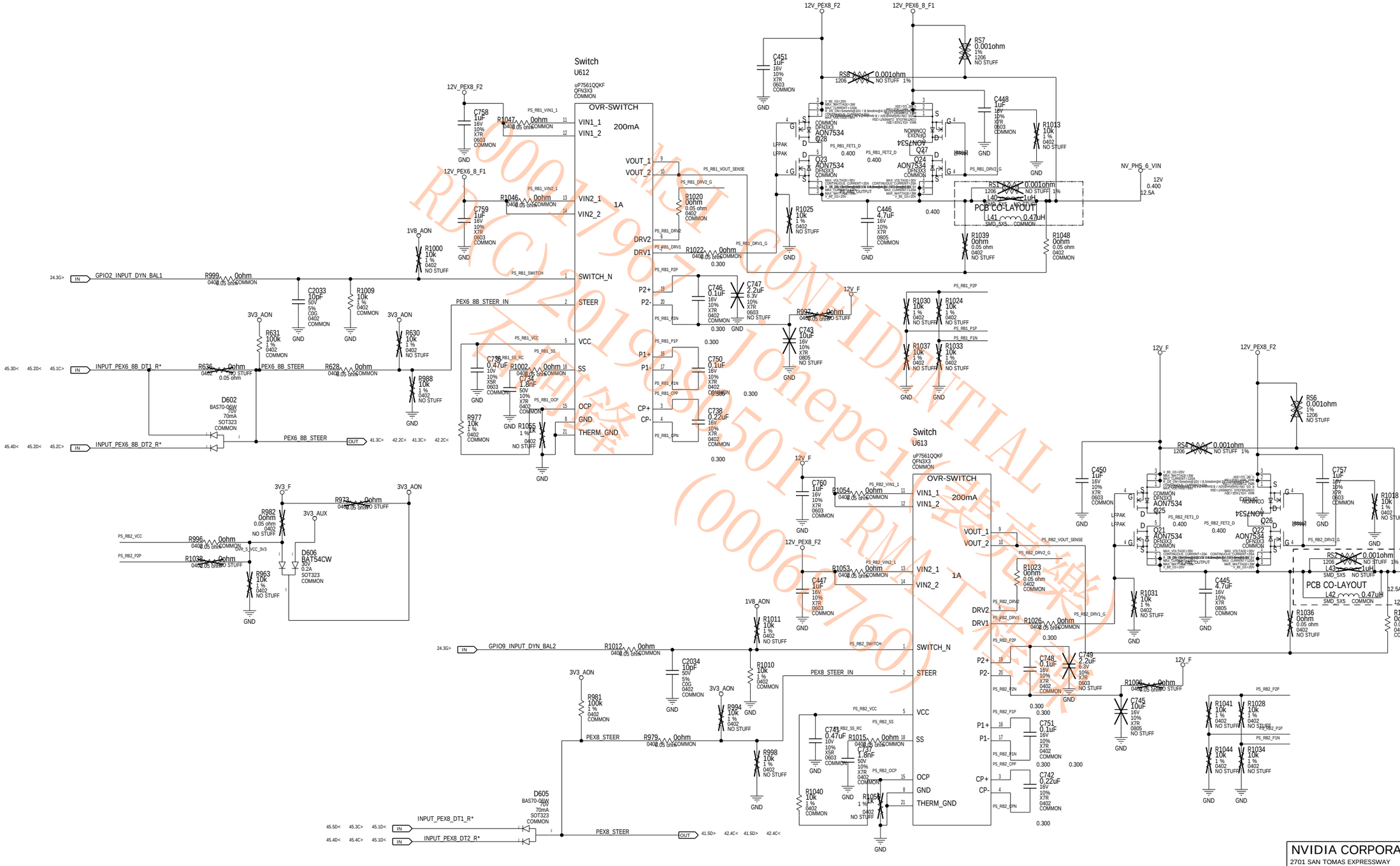

900179871 CONFIDENTIAL
RD(C)2019(0006760)

ASSEMBLY	SKU SCHEMATIC, COMMON & NO_STUFF ASSEMBLY NOTES AND FINAL BOM
PAGE DETAIL	PS: INPUT SWITCH RAIL BALANCE

ALL NVIDIA DESIGN SPECIFICATIONS, REFERENCE SPECIFICATIONS, REFERENCE BOARDS, FILES, DRAWINGS, DIAGNOSTICS, LISTS AND OTHER DOCUMENTS OR INFORMATION (TOGETHER AND SEPARATELY, 'MATERIALS') ARE BEING PROVIDED 'AS IS'. THE MATERIALS MAY CONTAIN KNOWN AND UNKNOWN VIOLATIONS OR DEVIATIONS OF INDUSTRY STANDARDS AND SPECIFICATIONS. NVIDIA MAKES NO WARRANTIES, EXPRESSED, IMPLIED, STATUTORY OR OTHERWISE WITH RESPECT TO THE MATERIALS OR OTHERWISE, AND EXPRESSLY DISCLAIMS ALL IMPLIED WARRANTIES INCLUDING, WITHOUT LIMITATION, THE WARRANTIES OF DESIGN, OF NONINFRINGEMENT, MERCHANTABILITY OR FITNESS FOR A PARTICULAR PURPOSE, OR ARISING FROM A COURSE OF DEALING, TRADE USAGE, TRADE PRACTICE, OR INDUSTRY STANDARDS.

NVIDIA CORPORATION
2701 SAN TOMAS EXPRESSWAY
SANTA CLARA, CA 95050, USA

NV_PN	600-1G180-0002-300		
PCB REV	PG180-A02	PAGE	41 OF 54
BOM REV	B	DATE	21-JUN-2018

PAGE 42: PS: 12V CURRENT STEERING

12V CURRENT STEERING (UNDER POWER BOOT):
GUIDES CURRENT FROM PEX EDGE TO PEX 6/8 PIN INPUT AREA

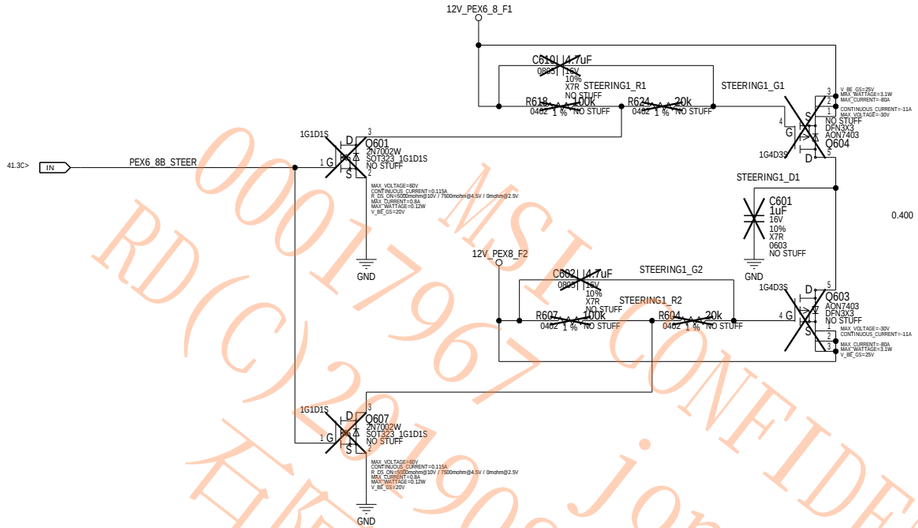

12V CURRENT STEERING (UNDER POWER BOOT):
GUIDES CURRENT FROM PEX EDGE TO PEX 8 PIN INPUT AREA

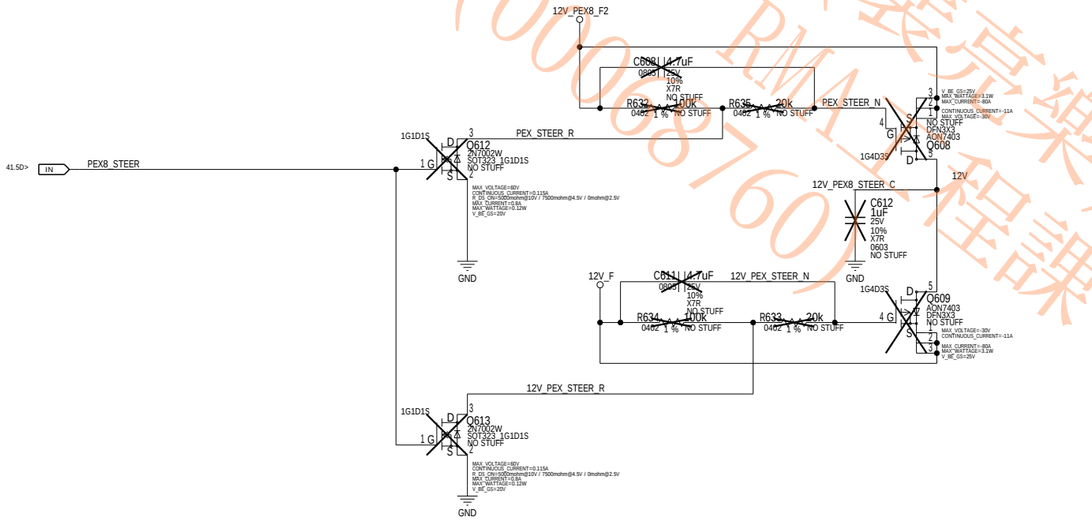

MSI CONFIDENTIAL
RD(C)2019080501 RMA 程課
石向鋒 jonepei(裴亮樂)
(0008760)

ASSEMBLY	SKU SCHEMATIC, COMMON & NO STUFF ASSEMBLY NOTES AND FINAL BOM
PAGE DETAIL	PS: 12V CURRENT STEERING

ALL NVIDIA DESIGN SPECIFICATIONS, REFERENCE SPECIFICATIONS, REFERENCE BOARDS, FILES, DRAWINGS, DIAGNOSTICS, LISTS AND OTHER DOCUMENTS OR INFORMATION (TOGETHER AND SEPARATELY, 'MATERIALS') ARE BEING PROVIDED 'AS IS'. THE MATERIALS MAY CONTAIN KNOWN AND UNKNOWN VIOLATIONS OR DEVIATIONS OF INDUSTRY STANDARDS AND SPECIFICATIONS. NVIDIA MAKES NO WARRANTIES, EXPRESSED, IMPLIED, STATUTORY OR OTHERWISE WITH RESPECT TO THE MATERIALS OR OTHERWISE, AND EXPRESSLY DISCLAIMS ALL IMPLIED WARRANTIES INCLUDING, WITHOUT LIMITATION, THE WARRANTIES OF DESIGN, OF NONINFRINGEMENT, MERCHANTABILITY OR FITNESS FOR A PARTICULAR PURPOSE, OR ARISING FROM A COURSE OF DEALING, TRADE USAGE, TRADE PRACTICE, OR INDUSTRY STANDARDS.

NVIDIA CORPORATION
2701 SAN TOMAS EXPRESSWAY
SANTA CLARA, CA 95050, USA

NV_PN	600-1G180-0002-300		
PCB REV	PG180-A02	PAGE	42 OF 54
BOM REV	B	DATE	21-JUN-2018

PAGE 43: PS: VR THERMAL PROTECTION

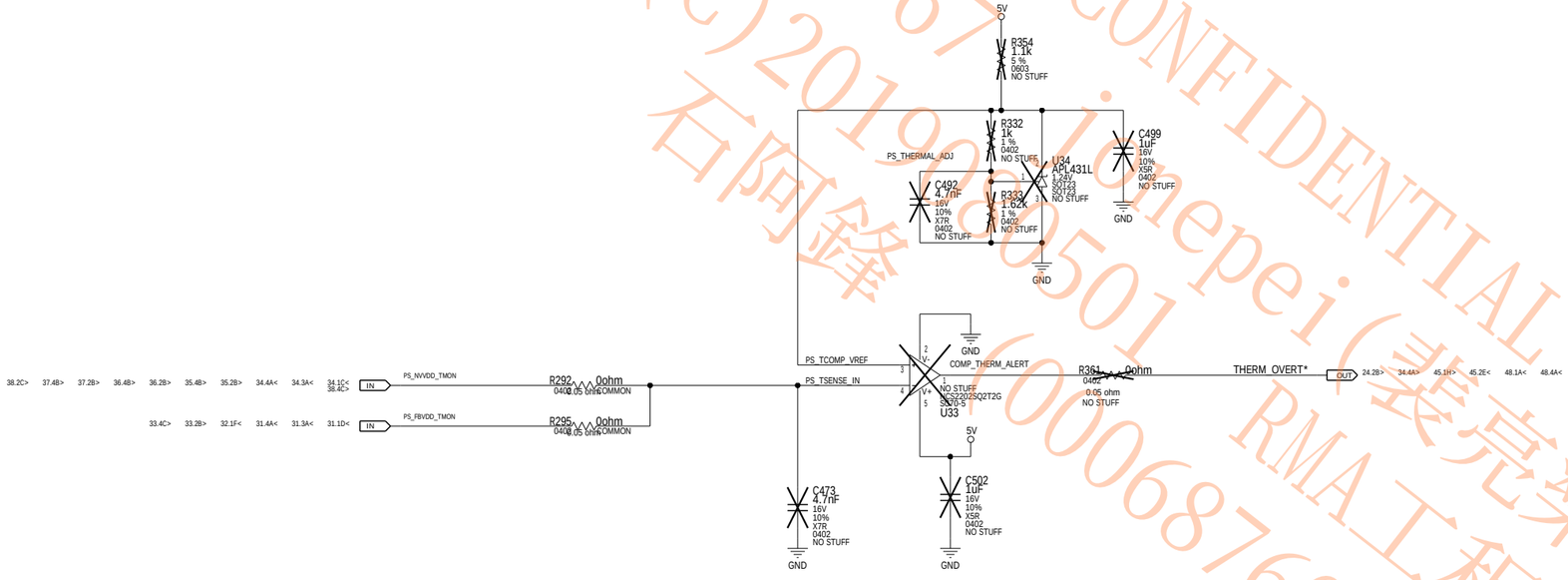

MSI CONFIDENTIAL
0001796 (Shipei(裴完樂)
RD(C)2019/05/05
石阿鋒(1000068760)
RMA工程課

ASSEMBLY	SKU SCHEMATIC, COMMON & NO_STUFF ASSEMBLY NOTES AND FINAL BOM
PAGE DETAIL	PS: VR THERMAL PROTECTION

ALL NVIDIA DESIGN SPECIFICATIONS, REFERENCE SPECIFICATIONS, REFERENCE BOARDS, FILES, DRAWINGS, DIAGNOSTICS, LISTS AND OTHER DOCUMENTS OR INFORMATION (TOGETHER AND SEPARATELY, 'MATERIALS') ARE BEING PROVIDED 'AS IS'. THE MATERIALS MAY CONTAIN KNOWN AND UNKNOWN VIOLATIONS OR DEVIATIONS OF INDUSTRY STANDARDS AND SPECIFICATIONS. NVIDIA MAKES NO WARRANTIES, EXPRESSED, IMPLIED, STATUTORY OR OTHERWISE WITH RESPECT TO THE MATERIALS OR OTHERWISE, AND EXPRESSLY DISCLAIMS ALL IMPLIED WARRANTIES INCLUDING, WITHOUT LIMITATION, THE WARRANTIES OF DESIGN, OF NONINFRINGEMENT, MERCHANTABILITY OR FITNESS FOR A PARTICULAR PURPOSE, OR ARISING FROM A COURSE OF DEALING, TRADE USAGE, TRADE PRACTICE, OR INDUSTRY STANDARDS.

NVIDIA CORPORATION
2701 SAN TOMAS EXPRESSWAY
SANTA CLARA, CA 95050, USA

NV_PN	600-1G180-0002-300		
PCB REV	PG180-A02	PAGE	43 OF 54
BOM REV	B	DATE	21-JUN-2018

PAGE 44: PS: Inputs, Filtering, and Monitoring

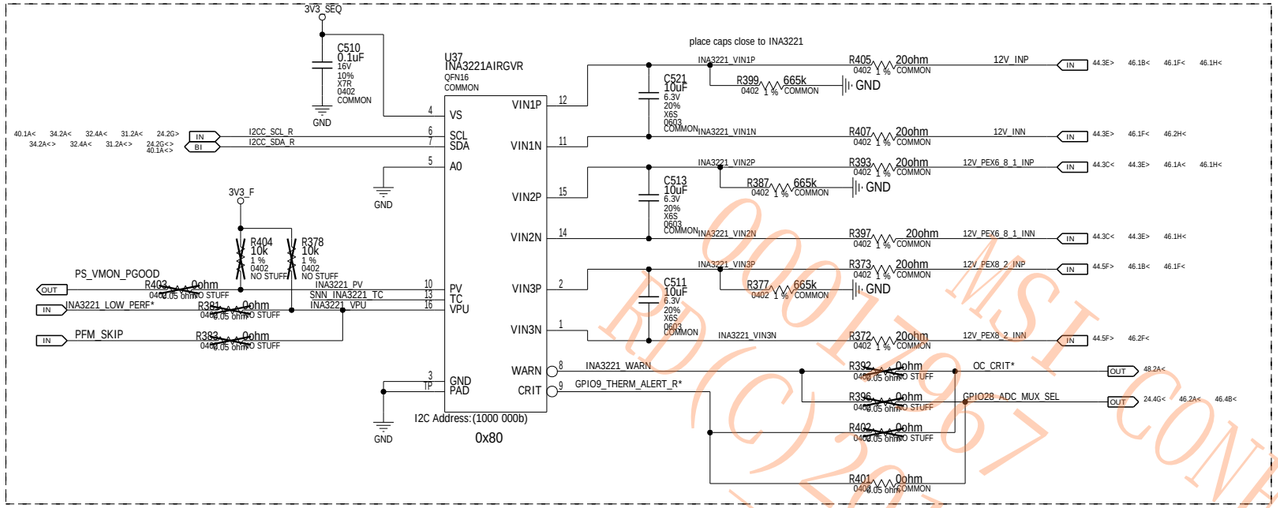

PEX 3V3 INPUT - 10W

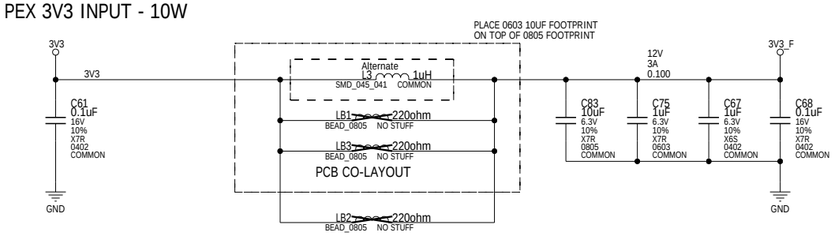

PEX_12V INPUT - 66W

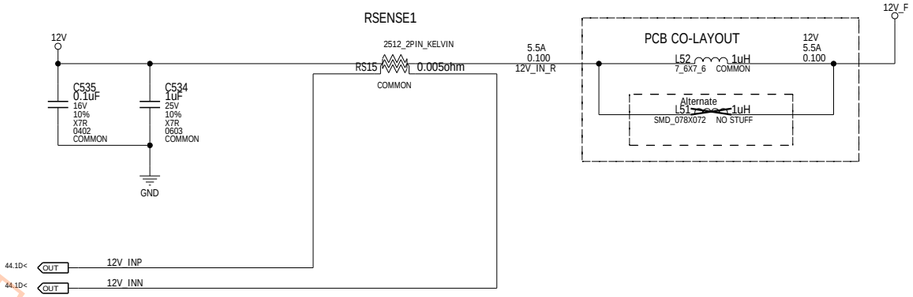

PEX6 INPUT 1 - 2x3 PCIE CON 75W

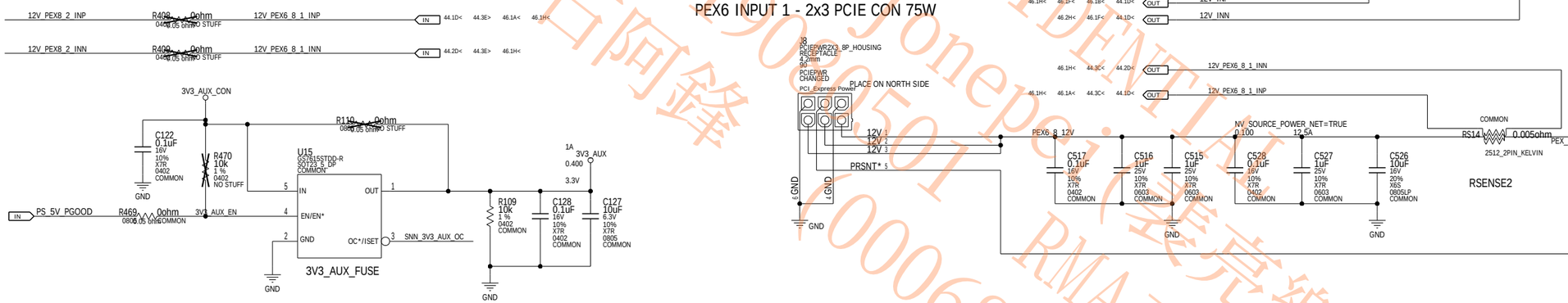

PEX8 INPUT 2 - 2x4 PCIE CON 150W

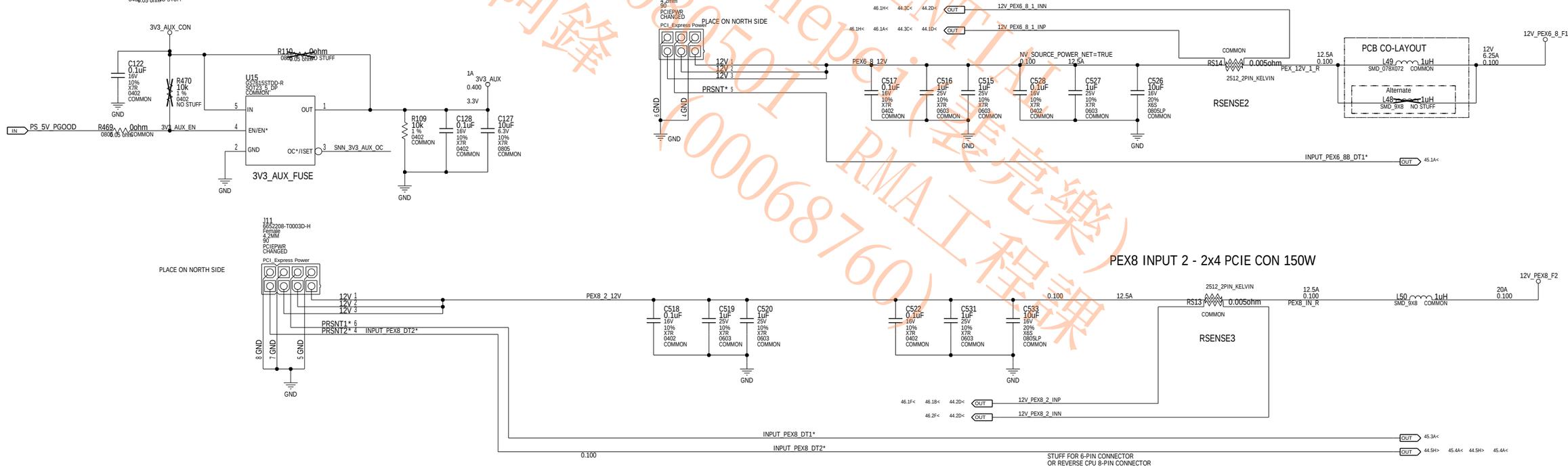

ASSEMBLY	SKU SCHEMATIC, COMMON & NO_STUFF ASSEMBLY NOTES AND FINAL BOM
PAGE DETAIL	PS: INPUTS, FILTERING AND MONITORING

ALL NVIDIA DESIGN SPECIFICATIONS, REFERENCE SPECIFICATIONS, REFERENCE BOARDS, FILES, DRAWINGS, DIAGNOSTICS, LISTS AND OTHER DOCUMENTS OR INFORMATION (TOGETHER AND SEPARATELY, 'MATERIALS') ARE BEING PROVIDED 'AS IS'. THE MATERIALS MAY CONTAIN KNOWN AND UNKNOWN VIOLATIONS OR DEVIATIONS OF INDUSTRY STANDARDS AND SPECIFICATIONS. NVIDIA MAKES NO WARRANTIES, EXPRESSED, IMPLIED, STATUTORY OR OTHERWISE WITH RESPECT TO THE MATERIALS OR OTHERWISE, AND EXPRESSLY DISCLAIMS ALL IMPLIED WARRANTIES INCLUDING, WITHOUT LIMITATION, THE WARRANTIES OF DESIGN, OF NONINFRINGEMENT, MERCHANTABILITY OR FITNESS FOR A PARTICULAR PURPOSE, OR ARISING FROM A COURSE OF DEALING, TRADE USAGE, TRADE PRACTICE, OR INDUSTRY STANDARDS.

NVIDIA CORPORATION
2701 SAN TOMAS EXPRESSWAY
SANTA CLARA, CA 95050, USA

NV_PN	600-1G180-0002-300		
PCB REV	PG180-A02	PAGE	44 OF 54
BOM REV	B	DATE	21-JUN-2018

MSI CONFIDENTIAL 001-19967 Jonepe(張完樂) RD(C)2019060501 (1000068760) RMA工程課

PAGE 45: PS: Current Steering, Hot Unplug Detect

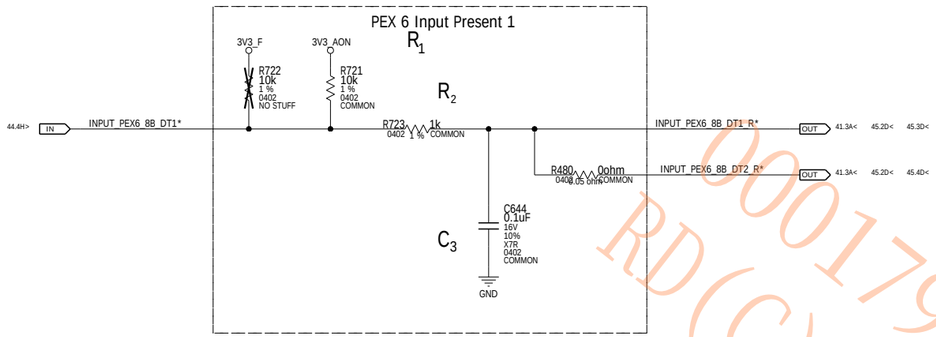

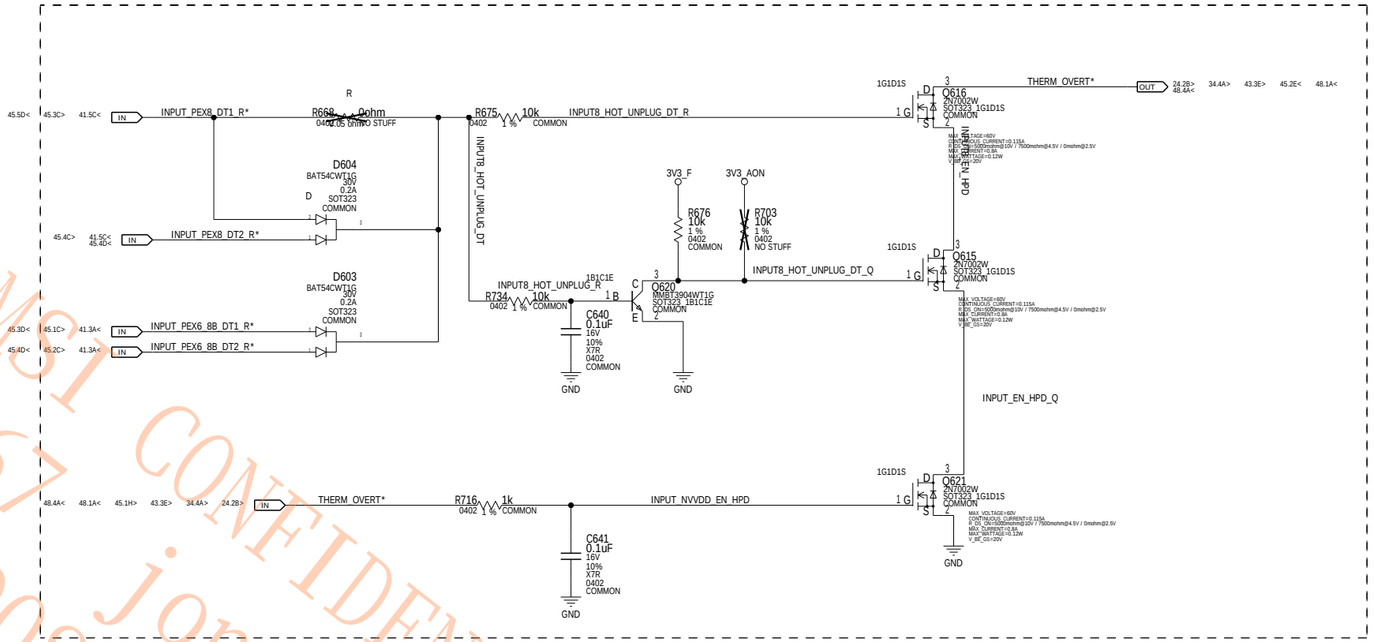

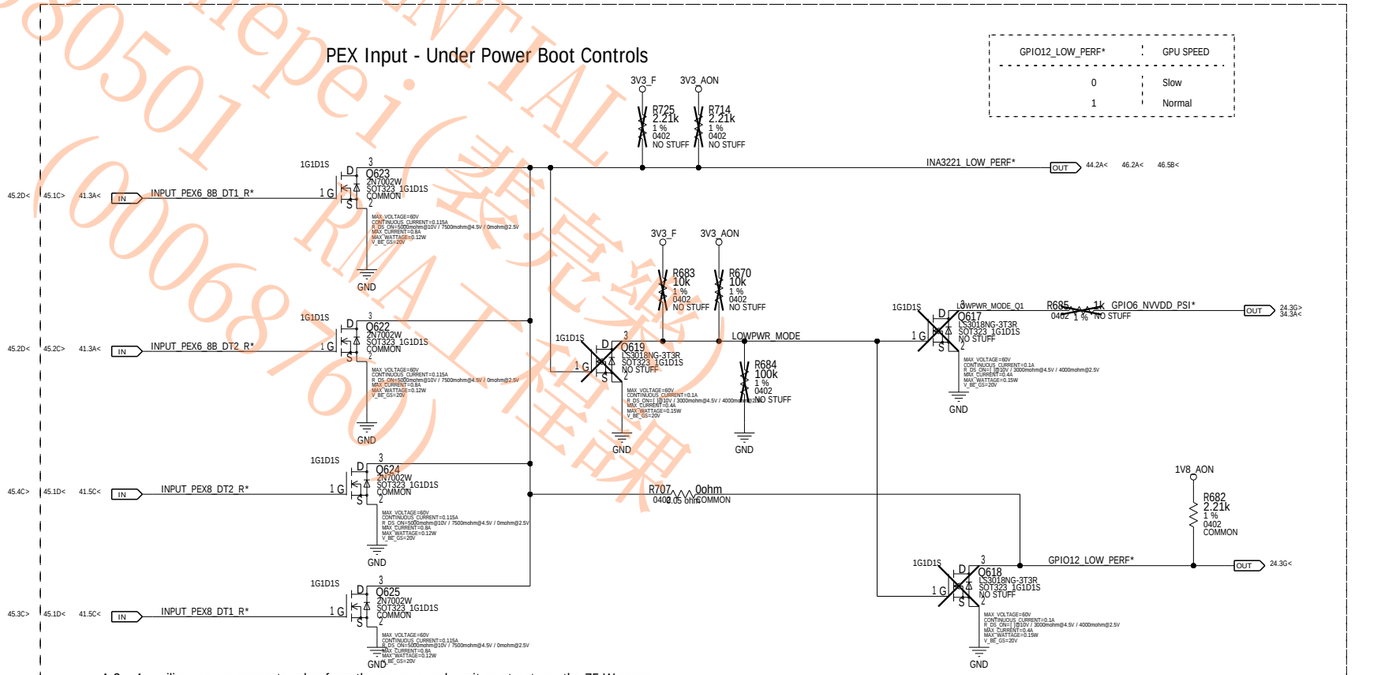

0001796 7 MSI CONFIDENTIAL
RD(C)20190801 jonepei(樊完锋)
(00068760) RMA工程部

ASSEMBLY	SKU SCHEMATIC, COMMON & NO_STUFF ASSEMBLY NOTES AND FINAL BOM
PAGE DETAIL	PS: CURRENT STEERING,HOT UNPLUG DETECT

ALL NVIDIA DESIGN SPECIFICATIONS, REFERENCE SPECIFICATIONS, REFERENCE BOARDS, FILES, DRAWINGS, DIAGNOSTICS, LISTS AND OTHER DOCUMENTS OR INFORMATION (TOGETHER AND SEPARATELY, 'MATERIALS') ARE BEING PROVIDED 'AS IS'. THE MATERIALS MAY CONTAIN KNOWN AND UNKNOWN VIOLATIONS OR DEVIATIONS OF INDUSTRY STANDARDS AND SPECIFICATIONS. NVIDIA MAKES NO WARRANTIES, EXPRESSED, IMPLIED, STATUTORY OR OTHERWISE WITH RESPECT TO THE MATERIALS OR OTHERWISE, AND EXPRESSLY DISCLAIMS ALL IMPLIED WARRANTIES INCLUDING, WITHOUT LIMITATION, THE WARRANTIES OF DESIGN, OF NONINFRINGEMENT, MERCHANTABILITY OR FITNESS FOR A PARTICULAR PURPOSE, OR ARISING FROM A COURSE OF DEALING, TRADE USAGE, TRADE PRACTICE, OR INDUSTRY STANDARDS.

NVIDIA CORPORATION
2701 SAN TOMAS EXPRESSWAY
SANTA CLARA, CA 95050, USA

NV_PN	600-1G180-0002-300		
PCB REV	PG180-A02	PAGE	45 OF 54
BOM REV	B	DATE	21-JUN-2018

PAGE46; PS: Pre-Filter

STUFF IF USING 2XMUX

2.7V..5.5V
0mV..26V
0.5mA
U605
NCP45491XMNTWG
QFN32
COMMON

3V3_SEQ
3V3_F
R658 0ohm 0.05 ohm 0402 COMMON
R666 0ohm 0.05 ohm 0402 NO STUFF
C621 1uF 6.3V 10% X7R 0402 COMMON
PFM_VCC_3V3
GND

R735 0ohm 0.05 ohm 0402 COMMON
R727 0ohm 0.05 ohm 0402 NO STUFF

12V_INP — R691 750k 0402 1% COMMON — PFM_CH1_BS_IN1
C628 100pF 50V 5% COG 0402 COMMON — R690 10k 0402 1% COMMON
12V_PEX6_8_1_INP — R710 750k 0402 1% COMMON — PFM_CH1_BS_IN2
12V_RTD3_PEX_INP — R711 402k 0402 1% NO STUFF
STUFF FOR SINGLE MUX
C637 100pF 50V 5% COG 0402 COMMON — R712 10k 0402 1% COMMON
12V_PEX8_2_INP — R741 750k 0402 1% COMMON — PFM_CH1_BS_IN3
C642 100pF 50V 5% COG 0402 COMMON — R731 10k 0402 1% COMMON
12V_PEX8_1_FBP — R739 402k 0402 1% NO STUFF — PFM_CH1_BS_IN4
C643 100pF 50V 5% COG 0402 NO STUFF — R747 10k 0402 1% NO STUFF
STUFF CH4 FOR SINGLE MUX
PFM_FITTER_GND_FET

R445 0ohm 0.05 ohm 0402 NO STUFF
C620 | 15nF | 16V | 10% | X7R | 0402 | COMMON — PFM_FITTER_SH_O1 — R663 158ohm 0402 1% COMMON
C639 | 15nF | 16V | 10% | X7R | 0402 | COMMON — PFM_FITTER_SH_O2 — R708 105ohm 0402 1% COMMON
C645 | 15nF | 16V | 10% | X7R | 0402 | COMMON — PFM_FITTER_SH_O3 — R724 90.9ohm 0402 1% COMMON
C650 | 15nF | 16V | 10% | X7R | 0402 | NO STUFF — PFM_FITTER_SH_O4 — R715 665ohm 0402 1% NO STUFF

PFM_VCC_3V3
12V_F
5V
R656 10k 1% 0402 NO STUFF
R642 10k 1% 0402 NO STUFF
R647 1k 1% 0402 COMMON
R655 10k 1% 0402 NO STUFF
GND

GPIO28_ADC_MUX_SEL — R660 0ohm 0.05 ohm 0402 COMMON — PFM_ADC_MUX_SEL_R
PFM_ADC_FILTER_EN
INA3221_LOW_PERF* — R654 0ohm 0.05 ohm 0402 NO STUFF
PFM_SKIP — R643 0ohm 0.05 ohm 0402 NO STUFF — PFM_SKIP_A
PFM_ADC_FILTER_MODE
R652 10k 1% 0402 COMMON
R645 30.1k 1% 0402 NO STUFF
R649 10k 1% 0402 COMMON
GND

PS_RTD3_12V_SW — R651 0ohm 0.05 ohm 0402 NO STUFF
GPIO1_GC6_FB_EN — R650 0ohm 0.05 ohm 0402 NO STUFF
R956 0ohm 0.05 ohm 0402 NO STUFF
R958 0ohm 0.05 ohm 0402 NO STUFF

BS_IN1 3
BS_IN2 6
BS_IN3 11
BS_IN4 14
GND_FET 9
SH_O1 32
SH_O2 7
SH_O3 10
SH_O4 17
MUX_SEL 29
EN 28
SKIP 25
MODE 26

VCC 27
SH_P1 2
SH_N1 1
SH_P2 5
SH_N2 4
SH_P3 12
SH_N3 13
SH_P4 15
SH_N4 16
DIFF_P 20
DIFF_N 19
BS_OK 30
NC 8
NC 18
NC 21
NC 31
BG_REF_OUT 23
BS_REF 24
CM_REF_IN 22
GND 33

PFM_VCC_3V3 — R658 0ohm 0.05 ohm 0402 COMMON — PFM_VCC_3V3
R666 0ohm 0.05 ohm 0402 NO STUFF
C621 1uF 6.3V 10% X7R 0402 COMMON
GND

12V_RTD3_PEX_INP — R665 100ohm 0402 1% COMMON — 12V_INP
12V_RTD3_PEX_INN — R671 0ohm 0.05 ohm 0402 COMMON — 12V_INN
PFM_CH1_SH_IN_P1
PFM_CH1_SH_IN_N1
PFM_CH1_SH_IN_P2
PFM_CH1_SH_IN_N2
12V_PEX8_2_INP — R729 100ohm 0402 1% COMMON — PFM_CH1_SH_IN_P3
12V_PEX8_2_INN — R728 0ohm 0.05 ohm 0402 COMMON — PFM_CH1_SH_IN_N3
12V_PEX8_1_FBP — R720 100ohm 0402 1% COMMON — PFM_CH1_SH_IN_P4
12V_PEX8_1_FBN — R719 0ohm 0.05 ohm 0402 COMMON — PFM_CH1_SH_IN_N4
C655 | 470pF | 50V | 10% | X7R | 0402 | NO STUFF — PFM_ADC_IN_P — PFM_ADC_IN_N
PFM_PF_BSOK_R

SNN_ADC_CUSTOM8
SNN_ADC_CUSTOM18
SNN_ADC_CUSTOM21
SNN_ADC_CUSTOM31

PFM_BG_REF_OUT — R693 90.9k 0402 1% COMMON — PFM_BG_REF_OUT_BSOKQ
PFM_BS_REF — R692 365k 0402 1% COMMON
PFM_CM_REF_IN — R698 681k 0402 1% COMMON
R694 10k 1% 0402 COMMON
C626 1nF 50V 10% X7R 0402 COMMON
R686 90.9k 0402 1% COMMON
Q614 MMBT3904WT1G SOT323_1B1C1E COMMON
PFM_BG_REF_OUT_BSOKQ
R679 49.9k 1% 0402 COMMON
C625 1nF 50V 10% X7R 0402 NO STUFF
PFM_PF_BSOK_QRC
C629 1nF 50V 10% X7R 0402 COMMON
C633 1nF 50V 10% X7R 0402 COMMON
GND

STUFF FOR SINGLE MUX
R704 100ohm 0402 1% NO STUFF — 12V_RTD3_PEX_INP
R690 0ohm 0.05 ohm 0402 NO STUFF — 12V_RTD3_PEX_INN
R705 100ohm 0402 1% COMMON — 12V_PEX6_8_1_INP
R702 0ohm 0.05 ohm 0402 COMMON — 12V_PEX6_8_1_INN
R388 100ohm 0402 1% NO STUFF — 12V_INP
R384 0ohm 0.05 ohm 0402 NO STUFF — 12V_INN

3V3_SEQ
3V3_F
R389 10k 1% 0402 COMMON
R662 10k 1% 0402 NO STUFF
R386 100k 1% 0402 NO STUFF
R390 10k 0402 1% COMMON
PFM_SKIP
PFM_PF_BSOK_Q
C514 1nF 50V 10% X7R 0402 COMMON
1G1D1S
Q33 2N7002DW SOT363 COMMON
MAX_VOLTAGE=60V
CONTINUOUS_CURRENT=0.115A
R_DS_ON(+-)=2000mohm@10V / -1000mohm@4.5V / -1000mohm@2.5V
MAX_CURRENT=0.5A
MAX_WATTAGE=0.225W
V_GE_GS=20V
PFM_PF_BSOK
R398 0ohm 0.05 ohm 0402 NO STUFF
GND

2.7V..5.5V
0mV..26V
0.5mA
U608
NCP45491XMNTWG
QFN32
COMMON

R801 0ohm 0.05 ohm 0402 NO STUFF
12V_RTD3_PEX_INP — R709 750k 0402 1% COMMON — PFM_B_CH1_BS_IN1
C665 | 100pF | 50V | 5% | C0G | 0402 | COMMON — R774 10k 0402 1% COMMON
12V_PEX6_8_1_OVR_INP — R842 750k 0402 1% COMMON — PFM_B_CH1_BS_IN2
C689 | 100pF | 50V | 5% | C0G | 0402 | COMMON — R809 10k 0402 1% COMMON
12V_PEX8_1_FBP — R778 750k 0402 1% COMMON — PFM_B_CH1_BS_IN3
C671 | 100pF | 50V | 5% | C0G | 0402 | COMMON — R790 10k 0402 1% COMMON
PFM_B_FITTER_GND_FET

PFM_B_VCC_3V3
12V_F
5V
R952 10k 1% 0402 NO STUFF
R951 10k 1% 0402 NO STUFF
R944 1k 1% 0402 NO STUFF
R930 10k 1% 0402 COMMON
GND

GPIO28_ADC_MUX_SEL — R932 0ohm 0.05 ohm 0402 COMMON — PFM_B_ADC_MUX_SEL_R
PFM_B_ADC_FILTER_EN
INA3221_LOW_PERF* — R923 0ohm 0.05 ohm 0402 NO STUFF
PFM_SKIP — R924 0ohm 0.05 ohm 0402 NO STUFF — PFM_B_SKIP
PFM_B_ADC_FILTER_MODE
R953 10k 1% 0402 COMMON
R950 30.1k 1% 0402 COMMON
R954 10k 1% 0402 NO STUFF
GND

R922 665ohm 0402 1% COMMON — PFM_B_FITTER_SH_O1
C714 | 15nF | 16V | 10% | X7R | 0402 | COMMON
R823 665ohm 0402 1% COMMON — PFM_B_FITTER_SH_O2
C681 | 15nF | 16V | 10% | X7R | 0402 | COMMON
R812 470ohm 0402 1% COMMON — PFM_B_FITTER_SH_O3
C677 | 15nF | 16V | 10% | X7R | 0402 | COMMON — SNN_PFM_B_SH_04

SH_O1 32
SH_O2 7
SH_O3 10
SH_O4 17
MUX_SEL 29
EN 28
SKIP 25
MODE 26

VCC 27
SH_P1 2
SH_N1 1
SH_P2 5
SH_N2 4
SH_P3 12
SH_N3 13
SH_P4 15
SH_N4 16
DIFF_P 20
DIFF_N 19
BS_OK 30
NC 8
NC 18
NC 21
NC 31
BG_REF_OUT 23
BS_REF 24
CM_REF_IN 22
GND 33

PFM_B_VCC_3V3
R931 0ohm 0.05 ohm 0402 COMMON
R925 0ohm 0.05 ohm 0402 NO STUFF
C712 1uF 6.3V 10% X7R 0402 COMMON
GND

R870 100ohm 0402 1% COMMON — 12V_RTD3_PEX_INP
R875 0ohm 0.05 ohm 0402 COMMON — 12V_RTD3_PEX_INN
R846 100ohm 0402 1% COMMON — 12V_PEX6_8_1_OVR_INP
R859 0ohm 0.05 ohm 0402 COMMON — 12V_PEX6_8_1_OVR_INN
R796 100ohm 0402 1% COMMON — 12V_PEX8_1_FBP
R797 0ohm 0.05 ohm 0402 COMMON — 12V_PEX8_1_FBN
R806 100ohm 0402 1% COMMON
R805 0ohm 0.05 ohm 0402 COMMON
PFM_B_CH1_SH_IN_P1
PFM_B_CH1_SH_IN_N1
PFM_B_CH1_SH_IN_P2
PFM_B_CH1_SH_IN_N2
PFM_B_CH1_SH_IN_P3
PFM_B_CH1_SH_IN_N3
PFM_B_CH1_SH_IN_P4
PFM_B_CH1_SH_IN_N4
PFM_ADC_IN_P
PFM_ADC_IN_N
PFM_B_PF_BSOK — R949 0ohm 0.05 ohm 0402 NO STUFF — PFM_PF_BSOK

SNN_ADC_CUSTOM8_B
SNN_ADC_CUSTOM18_B
SNN_ADC_CUSTOM21_B
SNN_ADC_CUSTOM31_B

PFM_B_BG_REF_OUT — R877 90.9k 0402 1% COMMON
PFM_B_BS_REF — R872 365k 0402 1% COMMON
PFM_B_CM_REF_IN — R876 681k 0402 1% COMMON
R903 10k 1% 0402 COMMON
C2064 1nF 50V 10% X7R 0402 COMMON
C2065 1nF 50V 10% X7R 0402 COMMON
C2066 1nF 50V 10% X7R 0402 COMMON
GND

MSI CONFIDENTIAL
RD2 20190805 Konpeki
台阿鋒 (0906820)

ASSEMBLY	SKU SCHEMATIC, COMMON & NO_STUFF ASSEMBLY NOTES AND FINAL BOM
PAGE DETAIL	PS: PRE-FILTER

ALL NVIDIA DESIGN SPECIFICATIONS, REFERENCE SPECIFICATIONS, REFERENCE BOARDS, FILES, DRAWINGS, DIAGNOSTICS, LISTS AND OTHER DOCUMENTS OR INFORMATION (TOGETHER AND SEPARATELY, 'MATERIALS') ARE BEING PROVIDED 'AS IS'. THE MATERIALS MAY CONTAIN KNOWN AND UNKNOWN VIOLATIONS OR DEVIATIONS OF INDUSTRY STANDARDS AND SPECIFICATIONS. NVIDIA MAKES NO WARRANTIES, EXPRESSED, IMPLIED, STATUTORY OR OTHERWISE WITH RESPECT TO THE MATERIALS OR OTHERWISE, AND EXPRESSLY DISCLAIMS ALL IMPLIED WARRANTIES INCLUDING, WITHOUT LIMITATION, THE WARRANTIES OF DESIGN, OF NONINFRINGEMENT, MERCHANTABILITY OR FITNESS FOR A PARTICULAR PURPOSE, OR ARISING FROM A COURSE OF DEALING, TRADE USAGE, TRADE PRACTICE, OR INDUSTRY STANDARDS.

NVIDIA CORPORATION
2701 SAN TOMAS EXPRESSWAY
SANTA CLARA, CA 95050, USA

NV_PN	600-1G180-0002-300		
PCB REV	PG180-A02	PAGE	46 OF 54
BOM REV	B	DATE	21-JUN-2018

PAGE 47: SEQUENCE:5V,1V8,NV3V3 ENABLE

5V ENABLE

12V_F_RTD3 · 12V_PEX6_8_RTD3 · 3V3_RTD3

R461 100k 1% 0402 NO STUFF · R462 100k 1% 0402 COMMON · R1222 100k 1% 0402 COMMON · R1216 100k 1% 0402 NO STUFF · R1213 100k 1% 0402 NO STUFF

PS_5V_EN_Q2_R · R463 66.5k 0402 1% COMMON · 0.400 5.5A

PS_5V_EN_Q2 · Q40 RMBT3904D SOT363 COMMON

GPIO1_GC6_FB_EN · R460 10k 0402 1% COMMON · PS_5V_EN_Q1 · Q40 RMBT3904D SOT363 COMMON

R1217 100k 1% 0402 COMMON · C1888 10nF 16V 10% X7R 0402 COMMON

PS_5V_EN → OUT

For 5V Buck-Boost

1V8AON ENABLE

3V3_SEQ · 5V

R1305 10k 1% 0402 COMMON · R1329 4.99k 1% 0402 COMMON

PS_5V_PGOOD · R1324 0ohm 0402 0.05 ohm COMMON

PS_VMON_PGOOD · R1297 0ohm 0402 0.05 ohm COMMON

R1328 10k 1% 0402 COMMON

C1946 0.1uF 0402 16V 10% X7R COMMON

U622 M74VHC1GT08DFT2G SC70-5 COMMON

PS_5V_PGOOD_AND · PS_VMON_PGOOD_AND · PS_1V8_AON_EN_AND

R85215330T1G D612 SOD523 30V 0.2A COMMON

R1318 100k 0402 1% NO STUFF

PS_1V8_AON_EN → OUT

C1950 0.1uF 16V 10% X7R 0402 COMMON · R1310 100k 1% 0402 COMMON

VPP is merged to 1V8AON for G5X/G6

R431 100k 1% 0402 COMMON

NV3V3 ENABLE

1V8_AON

R1335 10k 1% 0402 COMMON

R1343 0ohm 0402 0.05 ohm NO STUFF

PS_1V8_AON_PGOOD · R1349 0ohm 0402 0.05 ohm COMMON

C1953 0.1uF 16V 10% X7R 0402 NO STUFF

3V3_SEQ

C1954 0.1uF 0402 16V 10% X7R COMMON

U623 M74VHC1GT08DFT2G SC70-5 COMMON

PS_NV3V3_EN → OUT

R1356 100k 1% 0402 COMMON

1V8MAIN ENABLE

R1227 0ohm 0402 0.05 ohm NO STUFF

3V3_SEQ · 1V8_AON

R464 0ohm 0.05 ohm 0402 NO STUFF · R465 0ohm 0.05 ohm 0402 COMMON

PS_1V8_MAIN_OR_VCC

C1886 0.1uF 0402 16V 10% X7R COMMON

1V8_AON

R1226 10k 1% 0402 COMMON

GPIO4_GC6_1V8_MAIN_EN · PS_SLI_FGC6_OR

U618 SN74LVC1G32DCKR SC70 COMMON

PS_1V8_MAIN_EN → OUT

C1869 0.1uF 16V 10% X7R 0402 NO STUFF · R1210 100k 1% 0402 CHANGED

3V3_SEQ

Used for Power Sequence Only

R447 10k 1% 0402 NO STUFF · C460 4.7uF 6.3V 20% X7R 0603 COMMON

U27 GS7155NVTD-R TDFN10_NOVR COMMON (TDFN3x3)

R241 2.2ohm 0402 5% COMMON · PS_5V_PGOOD · R446 0ohm 0402 0.05 ohm COMMON

PS_3V3_SEQ_VCTL · PS_3V3_SEQ_EN · SNN_3V3_SEQ_POK

VIN VIN VIN · VCTL · EN · POK · GND · VOUT VOUT VOUT · FB

C711 1uF 6.3V 10% X7R 0402 COMMON

C459 100pF 0402 50V 5% C0G COMMON · PS_3V3_SEQ_FB_R · R249 0ohm 0402 0.05 ohm COMMON

R265 24.3k 0402 1% COMMON · R270 7.68k 1% 0402 COMMON · PS_3V3_SEQ_FB

0.100 → 3V3_SEQ

C453 4.7uF 6.3V 20% X6S 0603 COMMON · C452 10uF 6.3V 10% X7R 0805 COMMON

NV3V3

3V3_RTD3 · C1875 1uF 6.3V 10% X7R 0402 NO STUFF

U617 GS7612SSMA-R SOT23_5_EFU NO STUFF

IN · EN/EN* · GND · OUT · OC*/ISET → SNN_NV3V3_OC

0.100 · 1A → NV3V3

C1865 4.7uF 6.3V 20% X6S 0603 NO STUFF

BACKUP SOLUTION

GPIO PU, USB_VPP

U616 3.3V NCP114AMX330TCG UDFN4_NOVR COMMON (uDFN 1x1)

GND · C1866 1uF 0402 6.3V 10% X7R COMMON

PS_NV3V3_EN · IN · EN · OUT · GND/NC/TP

1A · 0.100 → NV3V3

C1887 4.7uF 6.3V 20% X6S 0603 COMMON

DDC5V

5V

R1345 10k 1% 0402 NO STUFF

R1351 0ohm 0402 0.05 ohm COMMON · DDC5V_EN

U624 GS7612SSMA-R SOT23_5_EFU COMMON

IN · EN/EN* · GND · OUT · OC*/ISET → SNN_DDC_5V_OC

0.100 · 3.3V · 0.2A → DDC_5V

R1354 0ohm 0402 0.05 ohm NO STUFF

C1962 220pF 50V 5% C0G 0402 COMMON · C1964 4.7uF 6.3V 20% X6S 0603 COMMON · C1972 10uF 6.3V 10% X7R 0805 COMMON NO STUFF

Place it closed to 5V regulator

DP_AUX Protection

12V_F

R1378 10k 1% 0402 COMMON · R1357 10k 1% 0402 COMMON

R1360 10k 0402 1% COMMON · DP_AUX_PROT_R

Q649 RMBT3904D SOT363 COMMON · DP_AUX_PROT_Q

DP_AUX_PROT → OUT

3V3_PORT

3V3_F

C1996 1uF 6.3V 10% X7R 0402 COMMON

U628 GS7612SSMA-R SOT23_5_EFU COMMON

IN · EN/EN* · GND · OUT · OC*/ISET → SNN_3V3PROT_OC

0.100 · 1A → 3V3_PROT

C1995 4.7uF 6.3V 20% X6S 0603 COMMON

NVHS 3V3,190mA

PS_NVPEX_PGOOD

3V3 FOR NVLINK CLK Generator

MSI CONFIDENTIAL
0001967 jonepei(裴亮翔)
RD(CC)20190805
石阿修(00068760) RMA(保固)

ASSEMBLY	SKU SCHEMATIC, COMMON & NO_STUFF ASSEMBLY NOTES AND FINAL BOM
PAGE DETAIL	SEQUENCE: 5V, 1V8, NV3V3 ENABLE

ALL NVIDIA DESIGN SPECIFICATIONS, REFERENCE SPECIFICATIONS, REFERENCE BOARDS, FILES, DRAWINGS, DIAGNOSTICS, LISTS AND OTHER DOCUMENTS OR INFORMATION (TOGETHER AND SEPARATELY, 'MATERIALS') ARE BEING PROVIDED 'AS IS'. THE MATERIALS MAY CONTAIN KNOWN AND UNKNOWN VIOLATIONS OR DEVIATIONS OF INDUSTRY STANDARDS AND SPECIFICATIONS. NVIDIA MAKES NO WARRANTIES, EXPRESSED, IMPLIED, STATUTORY OR OTHERWISE WITH RESPECT TO THE MATERIALS OR OTHERWISE, AND EXPRESSLY DISCLAIMS ALL IMPLIED WARRANTIES INCLUDING, WITHOUT LIMITATION, THE WARRANTIES OF DESIGN, OF NONINFRINGEMENT, MERCHANTABILITY OR FITNESS FOR A PARTICULAR PURPOSE, OR ARISING FROM A COURSE OF DEALING, TRADE USAGE, TRADE PRACTICE, OR INDUSTRY STANDARDS.

NVIDIA CORPORATION
2701 SAN TOMAS EXPRESSWAY
SANTA CLARA, CA 95050, USA

NV_PN	600-1G180-0002-300		
PCB REV	PG180-A02	PAGE	47 OF 54
BOM REV	B	DATE	21-JUN-2018

PAGE 48: SEQUENCE:NV,PEX,FB ENABLE

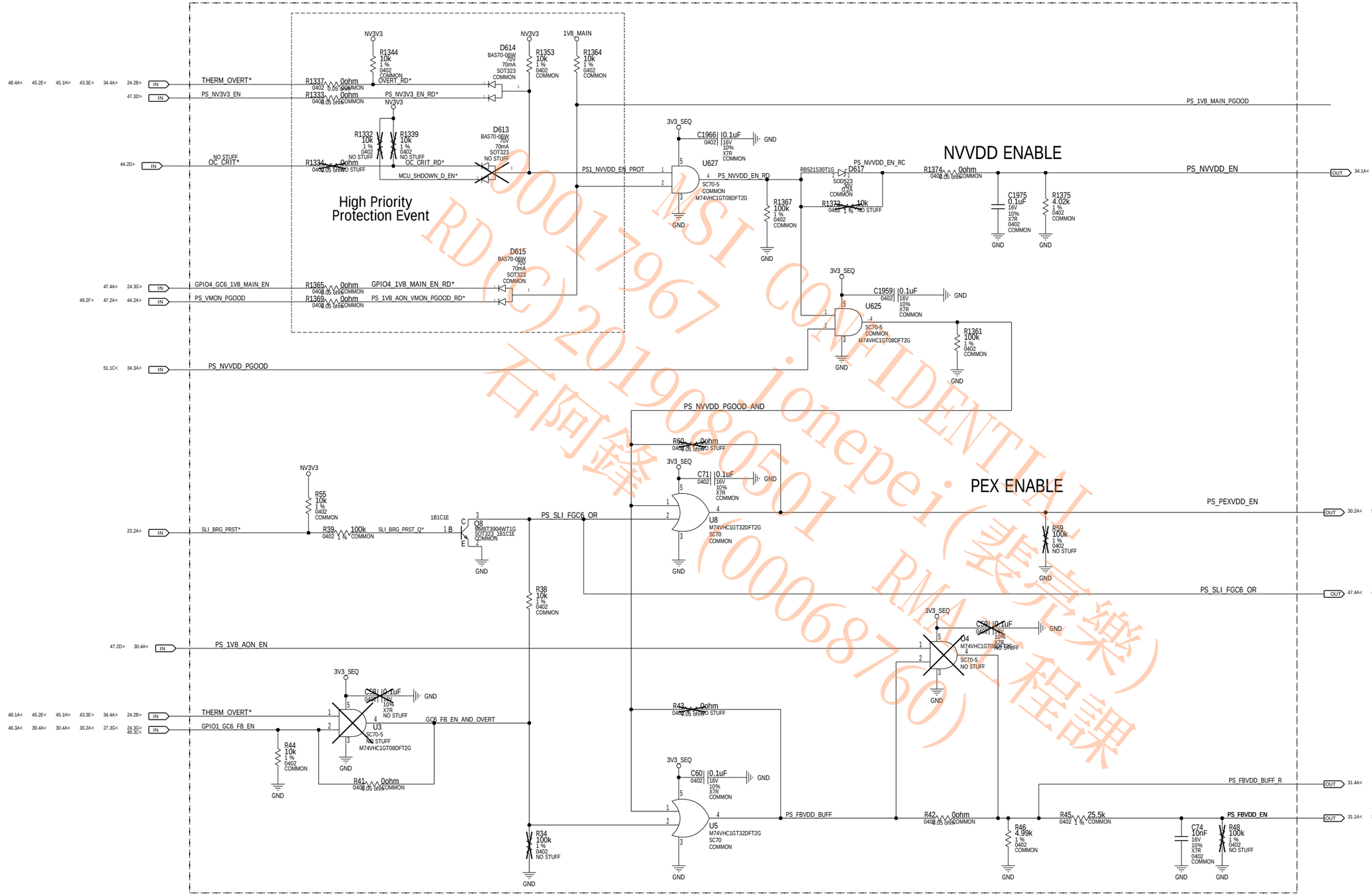

0000017967 MSI CONFIDENTIAL
RD(C)20190801 Jonepei(裴完樂)
石阿鋒（0000687 60）RMA工程課

ASSEMBLY	SKU SCHEMATIC, COMMON & NO_STUFF ASSEMBLY NOTES AND FINAL BOM
PAGE DETAIL	SEQUENCE: NV, PEX, FB ENABLE

ALL NVIDIA DESIGN SPECIFICATIONS, REFERENCE SPECIFICATIONS, REFERENCE BOARDS, FILES, DRAWINGS, DIAGNOSTICS, LISTS AND OTHER DOCUMENTS OR INFORMATION (TOGETHER AND SEPARATELY, 'MATERIALS') ARE BEING PROVIDED 'AS IS'. THE MATERIALS MAY CONTAIN KNOWN AND UNKNOWN VIOLATIONS OR DEVIATIONS OF INDUSTRY STANDARDS AND SPECIFICATIONS. NVIDIA MAKES NO WARRANTIES, EXPRESSED, IMPLIED, STATUTORY OR OTHERWISE WITH RESPECT TO THE MATERIALS OR OTHERWISE, AND EXPRESSLY DISCLAIMS ALL IMPLIED WARRANTIES INCLUDING, WITHOUT LIMITATION, THE WARRANTIES OF DESIGN, OF NONINFRINGEMENT, MERCHANTABILITY OR FITNESS FOR A PARTICULAR PURPOSE, OR ARISING FROM A COURSE OF DEALING, TRADE USAGE, TRADE PRACTICE, OR INDUSTRY STANDARDS.

NVIDIA CORPORATION
2701 SAN TOMAS EXPRESSWAY
SANTA CLARA, CA 95050, USA

NV_PN	600-1G180-0002-300		
PCB REV	PG180-A02	PAGE	48 OF 54
BOM REV	B	DATE	21-JUN-2018

PAGE 49: SEQUENCE:PCIE VOLTAGE MONITOR

PCIE Voltage Monitor

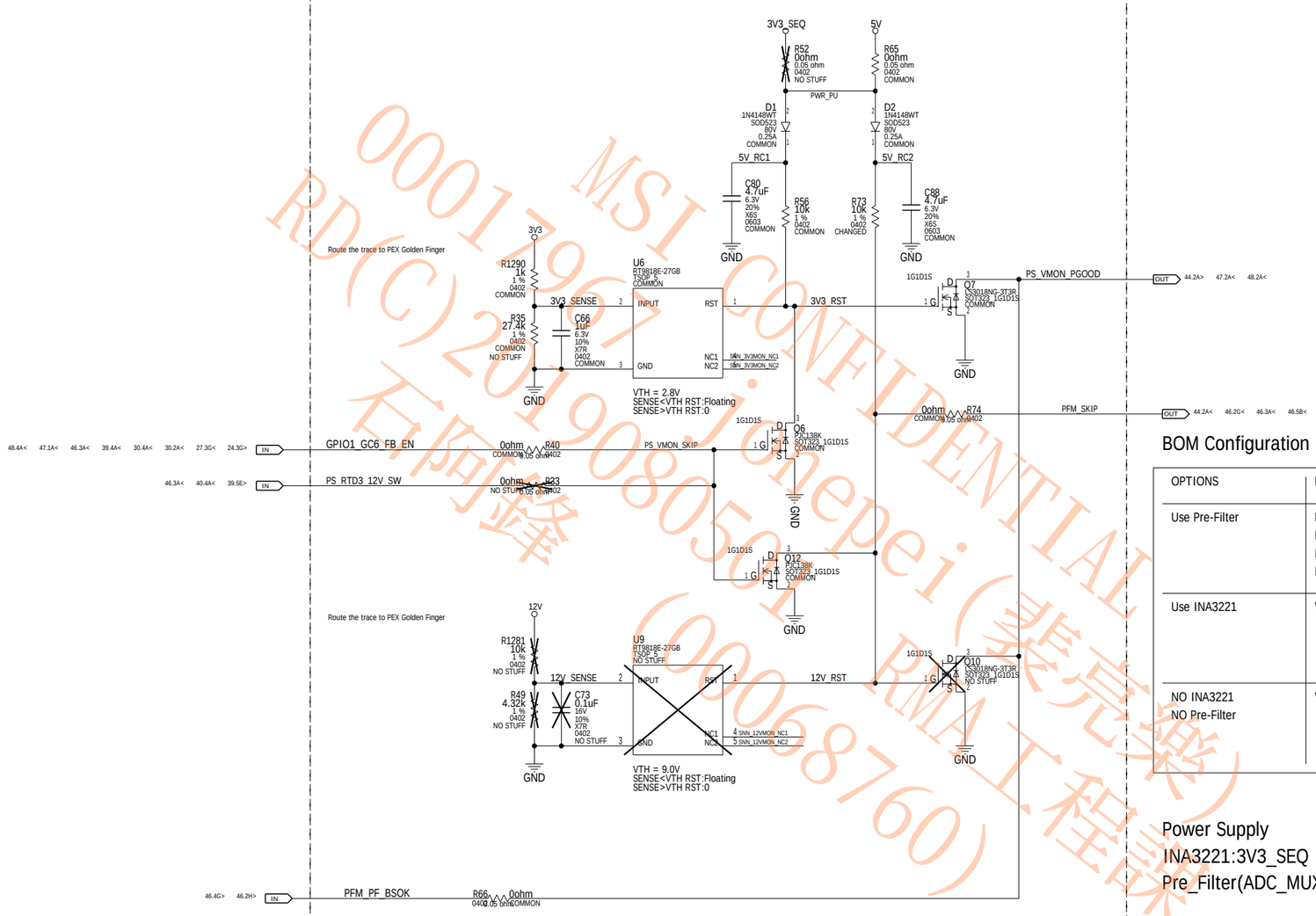

Signal	Direction	Function
3V3	INPUT	Sense the 3V3 Voltage from PCIE golden finger
12V	INPUT	Sense the 12V Voltage from PCIE golden finger
PS_VMON_PGOOD	OPEN-DRAIN	Floating(H) once both 3V3 and 12V reach Vth
GC6_FB_EN	INPUT	Indicator for RTD3/GC6 residence,Use to Mask the VMON_PGOOD
PS_PF_SKIP	INPUT	From INA3221(VPU) or Pre-filter(SKIP)
PS_PF_BSOK	INPUT	From INA3221(PV) or Pre-filter(BS_OK)
PS_RTD3_12V_SW	INPUT	GC6_FB_EN && IDLE_IN_SW

BOM Configuration

OPTIONS	PEX3V3_SENSE	PEX12V_SENSE	OTHER_12V_SENSE
Use Pre-Filter	Pre-Filter NO STUFF U12 NO STUFF Q3,Q5 NO STUFF D15	Pre-Filter NO STUFF U13 NO STUFF Q4	Pre-Filter
Use INA3221	Voltage_Monitor	INA3221 NO STUFF U12 NO STUFF Q4	INA3221
NO INA3221 NO Pre-Filter	Voltage_Monitor	Voltage_Monitor	N/A

Power Supply
INA3221:3V3_SEQ
Pre_Filter(ADC_MUX):3V3(PEX)

Dual Pre-Filter case:
Only use the Primary Pre-Filter to sense 3V3PEX
and All Input 12Vs

MSI CONFIDENTIAL
0001796708050(0006876O)
RD(C)2019080 Shepei(葉完樂)
RMA工程課

ASSEMBLY	SKU SCHEMATIC, COMMON & NO_STUFF ASSEMBLY NOTES AND FINAL BOM
PAGE DETAIL	SEQUENCE: PCIE VOLTAGE MONITOR

ALL NVIDIA DESIGN SPECIFICATIONS, REFERENCE SPECIFICATIONS, REFERENCE BOARDS, FILES, DRAWINGS, DIAGNOSTICS, LISTS AND OTHER DOCUMENTS OR INFORMATION (TOGETHER AND SEPARATELY, 'MATERIALS') ARE BEING PROVIDED 'AS IS'. THE MATERIALS MAY CONTAIN KNOWN AND UNKNOWN VIOLATIONS OR DEVIATIONS OF INDUSTRY STANDARDS AND SPECIFICATIONS. NVIDIA MAKES NO WARRANTIES, EXPRESSED, IMPLIED, STATUTORY OR OTHERWISE WITH RESPECT TO THE MATERIALS OR OTHERWISE, AND EXPRESSLY DISCLAIMS ALL IMPLIED WARRANTIES INCLUDING, WITHOUT LIMITATION, THE WARRANTIES OF DESIGN, OF NONINFRINGEMENT, MERCHANTABILITY OR FITNESS FOR A PARTICULAR PURPOSE, OR ARISING FROM A COURSE OF DEALING, TRADE USAGE, TRADE PRACTICE, OR INDUSTRY STANDARDS.

NVIDIA CORPORATION
2701 SAN TOMAS EXPRESSWAY
SANTA CLARA, CA 95050, USA

NV_PN	600-1G180-0002-300		
PCB REV	PG180-A02	PAGE	49 OF 54
BOM REV	B	DATE	21-JUN-2018

PAGE 50: SEQUENCE:DISCHARGE

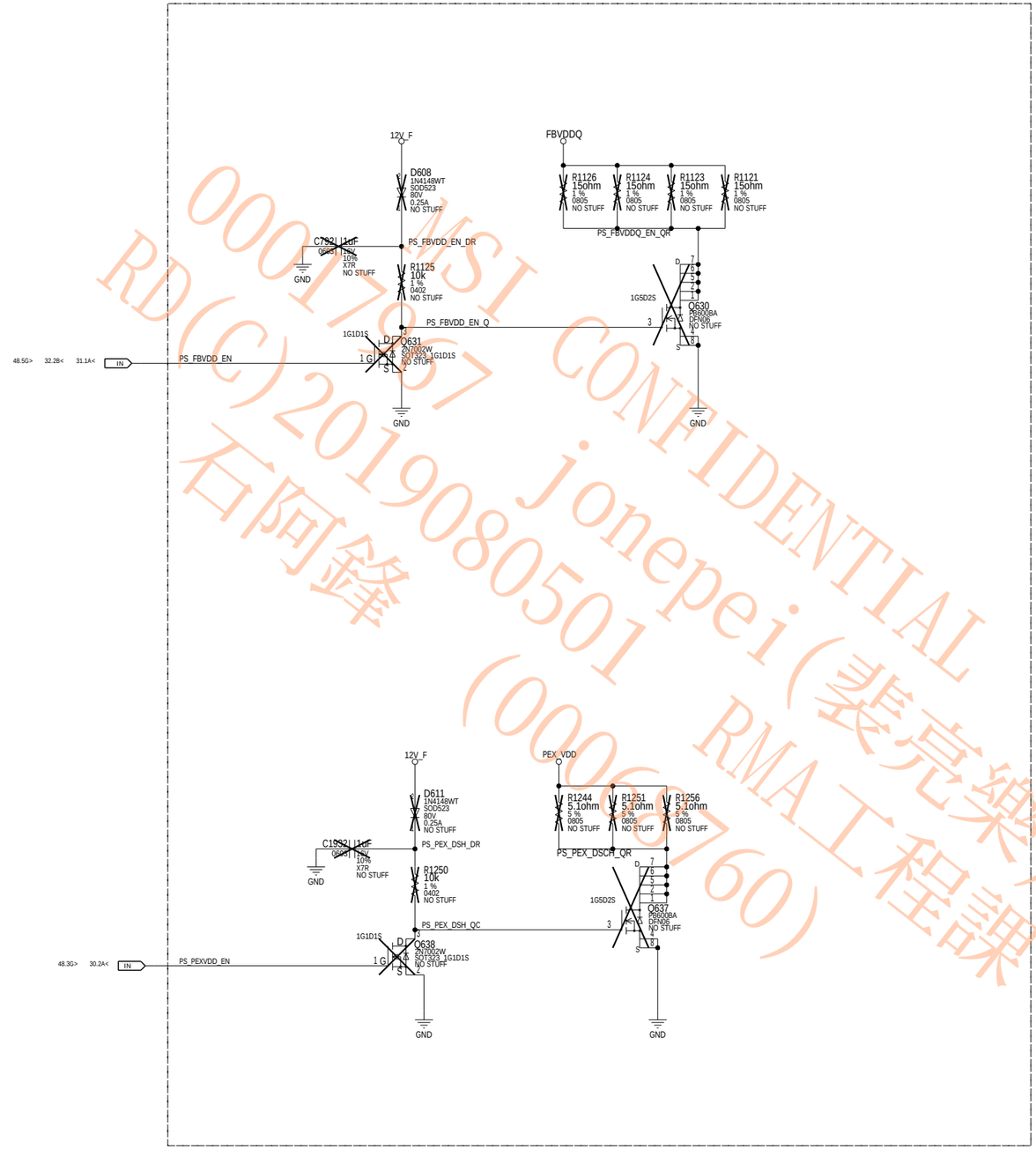

MSI CONFIDENTIAL
00017967 jonepei(裴亮樂)
RD(C)20190805 01 RMA工程課
石阿鋒 (00060760)

ASSEMBLY	SKU SCHEMATIC, COMMON & NO_STUFF ASSEMBLY NOTES AND FINAL BOM
PAGE DETAIL	SEQUENCE: DISCHARGE

ALL NVIDIA DESIGN SPECIFICATIONS, REFERENCE SPECIFICATIONS, REFERENCE BOARDS, FILES, DRAWINGS, DIAGNOSTICS, LISTS AND OTHER DOCUMENTS OR INFORMATION (TOGETHER AND SEPARATELY, 'MATERIALS') ARE BEING PROVIDED 'AS IS'. THE MATERIALS MAY CONTAIN KNOWN AND UNKNOWN VIOLATIONS OR DEVIATIONS OF INDUSTRY STANDARDS AND SPECIFICATIONS. NVIDIA MAKES NO WARRANTIES, EXPRESSED, IMPLIED, STATUTORY OR OTHERWISE WITH RESPECT TO THE MATERIALS OR OTHERWISE, AND EXPRESSLY DISCLAIMS ALL IMPLIED WARRANTIES INCLUDING, WITHOUT LIMITATION, THE WARRANTIES OF DESIGN, OF NONINFRINGEMENT, MERCHANTABILITY OR FITNESS FOR A PARTICULAR PURPOSE, OR ARISING FROM A COURSE OF DEALING, TRADE USAGE, TRADE PRACTICE, OR INDUSTRY STANDARDS.

NVIDIA CORPORATION
2701 SAN TOMAS EXPRESSWAY
SANTA CLARA, CA 95050, USA

NV_PN	600-1G180-0002-300		
PCB REV	PG180-A02	PAGE	50 OF 54
BOM REV	B	DATE	21-JUN-2018

PAGE 51: SEQUENCE:MISC

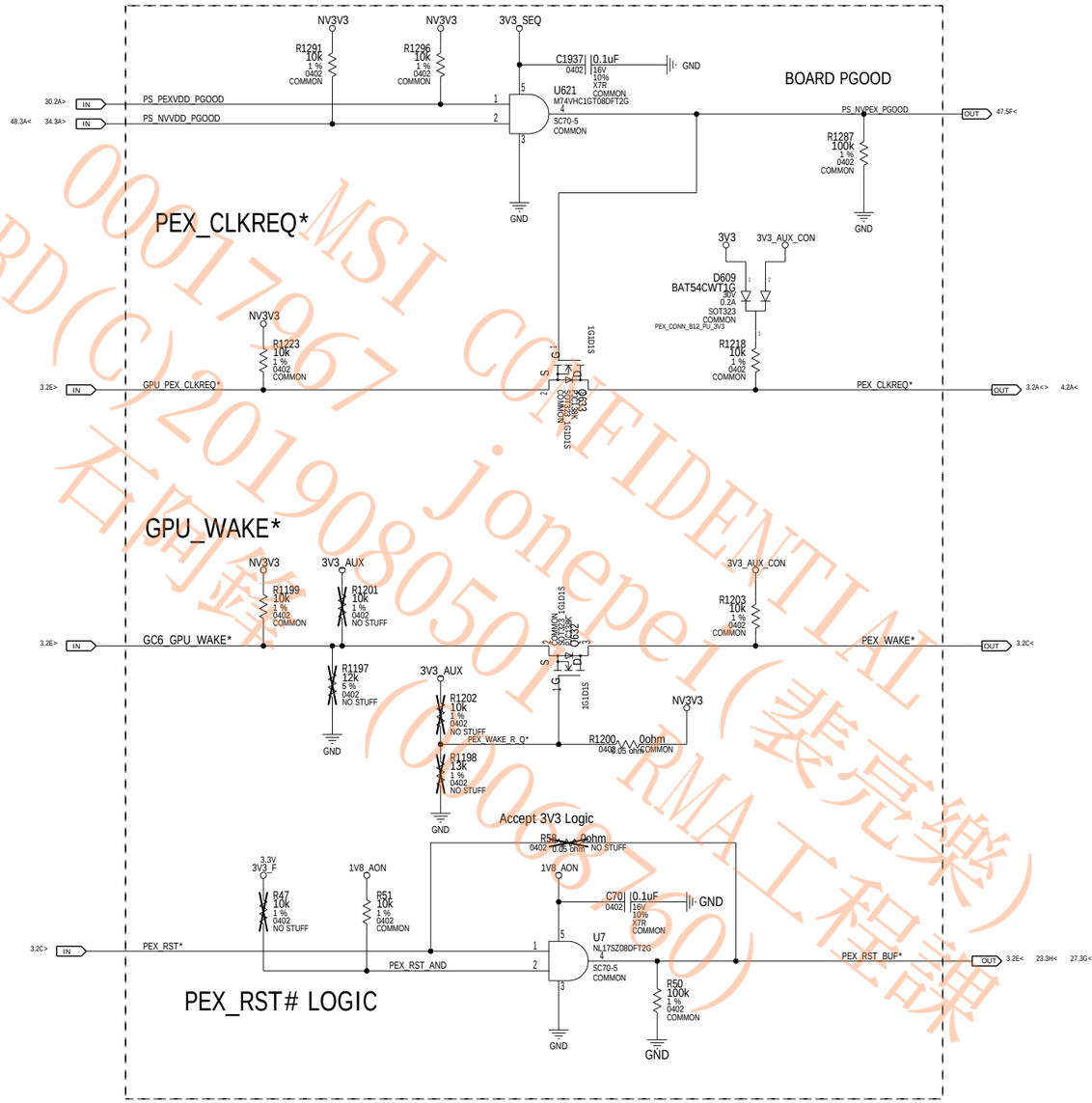

MSI CONFIDENTIAL
0001796 jonepei(裴完樂)
RD(C)20190805 RMA工程課
KT(A)(0006750)

ASSEMBLY	SKU SCHEMATIC, COMMON & NO_STUFF ASSEMBLY NOTES AND FINAL BOM
PAGE DETAIL	SEQUENCE: MISC

ALL NVIDIA DESIGN SPECIFICATIONS, REFERENCE SPECIFICATIONS, REFERENCE BOARDS, FILES, DRAWINGS, DIAGNOSTICS, LISTS AND OTHER DOCUMENTS OR INFORMATION (TOGETHER AND SEPARATELY, 'MATERIALS') ARE BEING PROVIDED 'AS IS'. THE MATERIALS MAY CONTAIN KNOWN AND UNKNOWN VIOLATIONS OR DEVIATIONS OF INDUSTRY STANDARDS AND SPECIFICATIONS. NVIDIA MAKES NO WARRANTIES, EXPRESSED, IMPLIED, STATUTORY OR OTHERWISE WITH RESPECT TO THE MATERIALS OR OTHERWISE, AND EXPRESSLY DISCLAIMS ALL IMPLIED WARRANTIES INCLUDING, WITHOUT LIMITATION, THE WARRANTIES OF DESIGN, OF NONINFRINGEMENT, MERCHANTABILITY OR FITNESS FOR A PARTICULAR PURPOSE, OR ARISING FROM A COURSE OF DEALING, TRADE USAGE, TRADE PRACTICE, OR INDUSTRY STANDARDS.

NVIDIA CORPORATION
2701 SAN TOMAS EXPRESSWAY
SANTA CLARA, CA 95050, USA

NV_PN	600-1G180-0002-300		
PCB REV	PG180-A02	PAGE	51 OF 54
BOM REV	B	DATE	21-JUN-2018

PAGE 52: LED & FAN HEADERS

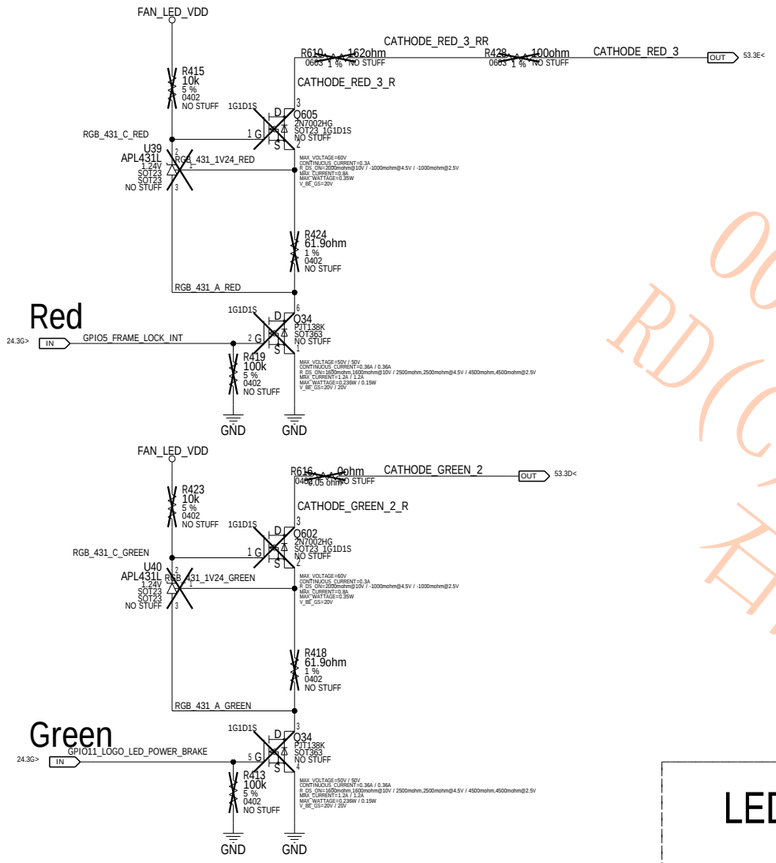

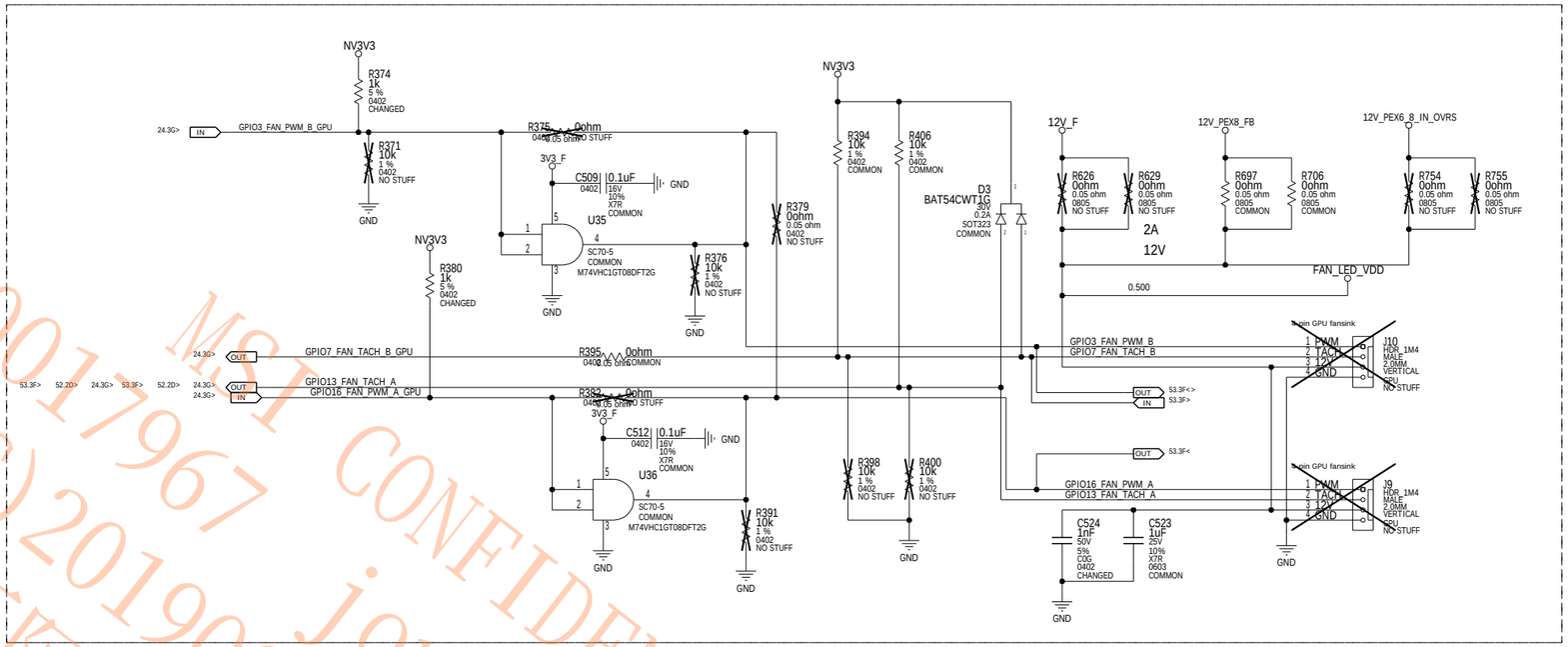

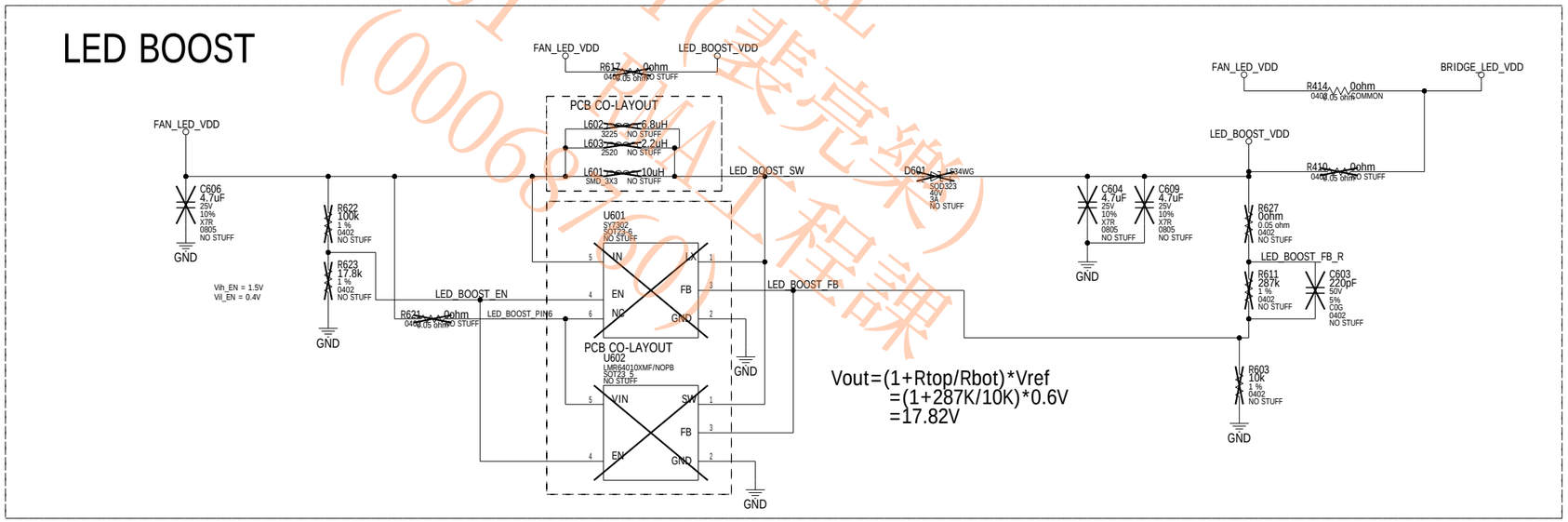

ASSEMBLY	SKU SCHEMATIC, COMMON & NO_STUFF ASSEMBLY NOTES AND FINAL BOM
PAGE DETAIL	LED & FAN HEADERS

ALL NVIDIA DESIGN SPECIFICATIONS, REFERENCE SPECIFICATIONS, REFERENCE BOARDS, FILES, DRAWINGS, DIAGNOSTICS, LISTS AND OTHER DOCUMENTS OR INFORMATION (TOGETHER AND SEPARATELY, 'MATERIALS') ARE BEING PROVIDED 'AS IS'. THE MATERIALS MAY CONTAIN KNOWN AND UNKNOWN VIOLATIONS OR DEVIATIONS OF INDUSTRY STANDARDS AND SPECIFICATIONS. NVIDIA MAKES NO WARRANTIES, EXPRESSED, IMPLIED, STATUTORY OR OTHERWISE WITH RESPECT TO THE MATERIALS OR OTHERWISE, AND EXPRESSLY DISCLAIMS ALL IMPLIED WARRANTIES INCLUDING, WITHOUT LIMITATION, THE WARRANTIES OF DESIGN, OF NONINFRINGEMENT, MERCHANTABILITY OR FITNESS FOR A PARTICULAR PURPOSE, OR ARISING FROM A COURSE OF DEALING, TRADE USAGE, TRADE PRACTICE, OR INDUSTRY STANDARDS.

NVIDIA CORPORATION
2701 SAN TOMAS EXPRESSWAY
SANTA CLARA, CA 95050, USA

NV_PN	600-1G180-0002-300		
PCB REV	PG180-A02	PAGE	52 OF 54
BOM REV	B	DATE	21-JUN-2018

00017967 MSI CONFIDENTIAL jonepei(裴完樂) RD(C)20190805(00066760)(EE工程課) 石阿鋒

PAGE 53:LED2

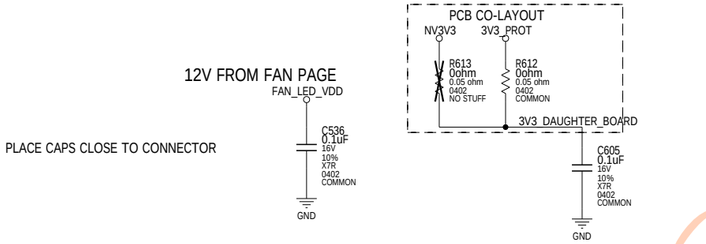

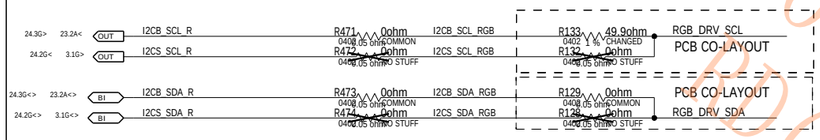

8-bit I2C Address of MCU on Daughter Board: TBD

MCU Solution		For ONE ZONE RGB/cable	
PIN SEQ	Pin Name	PIN SEQ	Pin Name
1	I2C_SCL	1	ID3
2	GND	2	ID2
3	I2C_SDA	3	ID1
4	PEX_RST_BUF*	4	DRIVE3/R
5	NV3V3	5	DRIVE2/G
6	12V/BOOST	6	DRIVE1/B
7	12V	7	12V/BOOST
8	12V	8	12V
9	FAN_PWM1	9	FAN_PWM1
10	GND	10	GND
11	FAN_TACH1	11	FAN_TACH1
12	FAN_TACH2	12	FAN_TACH2
13	GND	13	GND
14	FAN_PWM2	14	FAN_PWM2
		15	12V

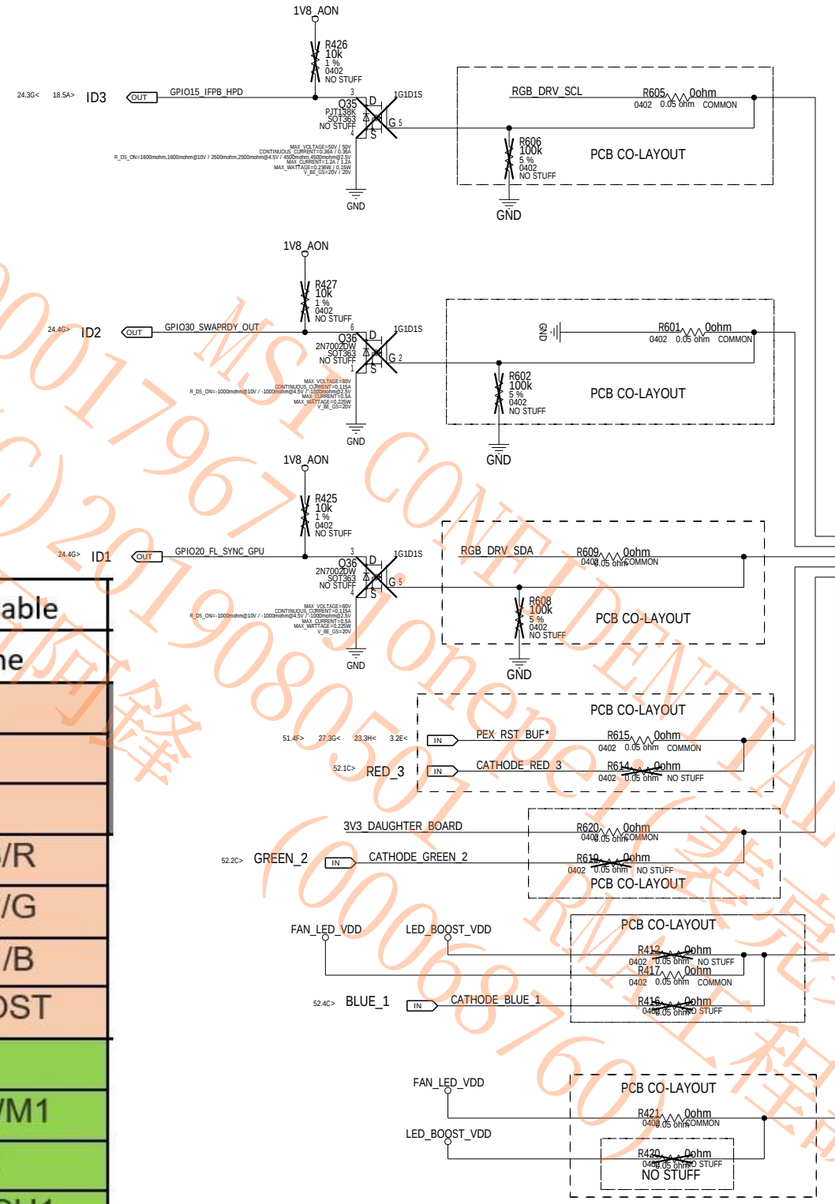

14-PIN STRAIGHT PRIMARY SOURCE -> 080-1586-000: ACES $0.115
14-PIN STRAIGHT SECOND SOURCE -> 080-1600-000: WIESON $0.2

FOR MCU SOLUTION

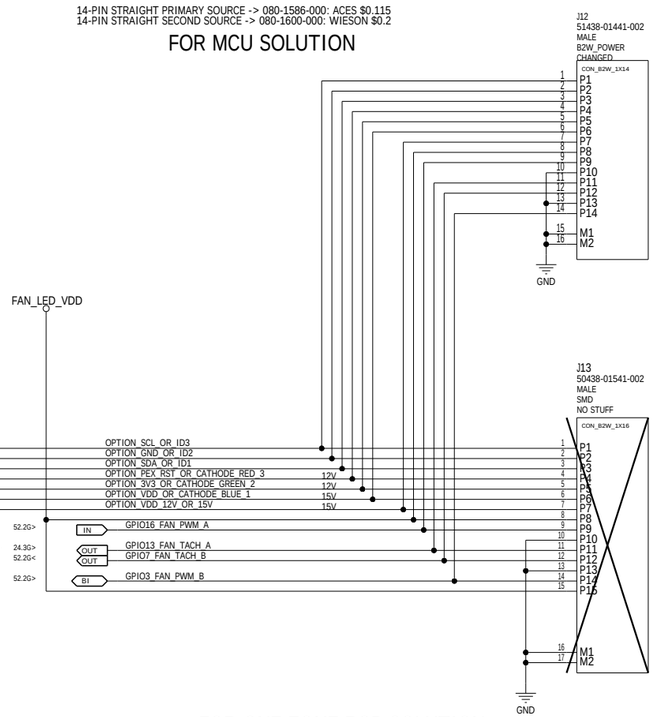

FOR ONE ZONE RGB SOLUTION

15-PIN STRAIGHT PRIMARY SOURCE -> 080-1617-000: ACES $0.1165
15-PIN STRAIGHT SECOND SOURCE -> 080-1628-000: WIESON $0.23

0001796 MSI CONFIDENTIAL
版权所有(C)2019 Jonepetech
080501 (00068760) RMA工程课

ASSEMBLY	SKU SCHEMATIC, COMMON & NO_STUFF ASSEMBLY NOTES AND FINAL BOM
PAGE DETAIL	LED 2

ALL NVIDIA DESIGN SPECIFICATIONS, REFERENCE SPECIFICATIONS, REFERENCE BOARDS, FILES, DRAWINGS, DIAGNOSTICS, LISTS AND OTHER DOCUMENTS OR INFORMATION (TOGETHER AND SEPARATELY, 'MATERIALS') ARE BEING PROVIDED 'AS IS'. THE MATERIALS MAY CONTAIN KNOWN AND UNKNOWN VIOLATIONS OR DEVIATIONS OF INDUSTRY STANDARDS AND SPECIFICATIONS. NVIDIA MAKES NO WARRANTIES, EXPRESSED, IMPLIED, STATUTORY OR OTHERWISE WITH RESPECT TO THE MATERIALS OR OTHERWISE, AND EXPRESSLY DISCLAIMS ALL IMPLIED WARRANTIES INCLUDING, WITHOUT LIMITATION, THE WARRANTIES OF DESIGN, OF NONINFRINGEMENT, MERCHANTABILITY OR FITNESS FOR A PARTICULAR PURPOSE, OR ARISING FROM A COURSE OF DEALING, TRADE USAGE, TRADE PRACTICE, OR INDUSTRY STANDARDS.

NVIDIA CORPORATION
2701 SAN TOMAS EXPRESSWAY
SANTA CLARA, CA 95050, USA

NV_PN	600-1G180-0002-300		
PCB REV	PG180-A02	PAGE	53 OF 54
BOM REV	B	DATE	21-JUN-2018

PAGE 54:MECHANICAL;BRACKET/THERMAL SOLUTION

MSI CONFIDENTIAL
0001796 jonepei(裝完樂)
RD(C)20190801 RMA工程課
(00068760)

Brackets:

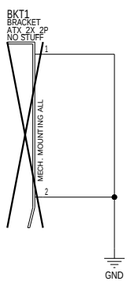

Bracket Screw

1

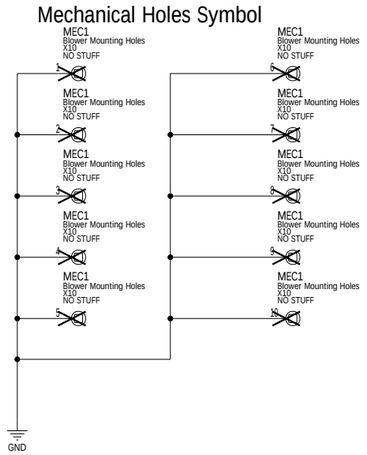

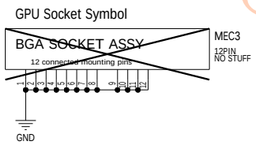

ASSEMBLY	SKU SCHEMATIC, COMMON & NO_STUFF ASSEMBLY NOTES AND FINAL BOM
PAGE DETAIL	Mechanical: Bracket/Thermal Solution

ALL NVIDIA DESIGN SPECIFICATIONS, REFERENCE SPECIFICATIONS, REFERENCE BOARDS, FILES, DRAWINGS, DIAGNOSTICS, LISTS AND OTHER DOCUMENTS OR INFORMATION (TOGETHER AND SEPARATELY, 'MATERIALS') ARE BEING PROVIDED 'AS IS'. THE MATERIALS MAY CONTAIN KNOWN AND UNKNOWN VIOLATIONS OR DEVIATIONS OF INDUSTRY STANDARDS AND SPECIFICATIONS. NVIDIA MAKES NO WARRANTIES, EXPRESSED, IMPLIED, STATUTORY OR OTHERWISE WITH RESPECT TO THE MATERIALS OR OTHERWISE, AND EXPRESSLY DISCLAIMS ALL IMPLIED WARRANTIES INCLUDING, WITHOUT LIMITATION, THE WARRANTIES OF DESIGN, OF NONINFRINGEMENT, MERCHANTABILITY OR FITNESS FOR A PARTICULAR PURPOSE, OR ARISING FROM A COURSE OF DEALING, TRADE USAGE, TRADE PRACTICE, OR INDUSTRY STANDARDS.

NVIDIA CORPORATION
2701 SAN TOMAS EXPRESSWAY
SANTA CLARA, CA 95050, USA

NV_PN	600-1G180-0002-300		
PCB REV	PG180-A02	PAGE	54 OF 54
BOM REV	B	DATE	21-JUN-2018